INSTRUCTION MANUAL

WIDE/SEMI-WIDE CAP TUBULAR GOODS FRAMES TME-DC (TYPE D2)

TAJIMA

(9703)

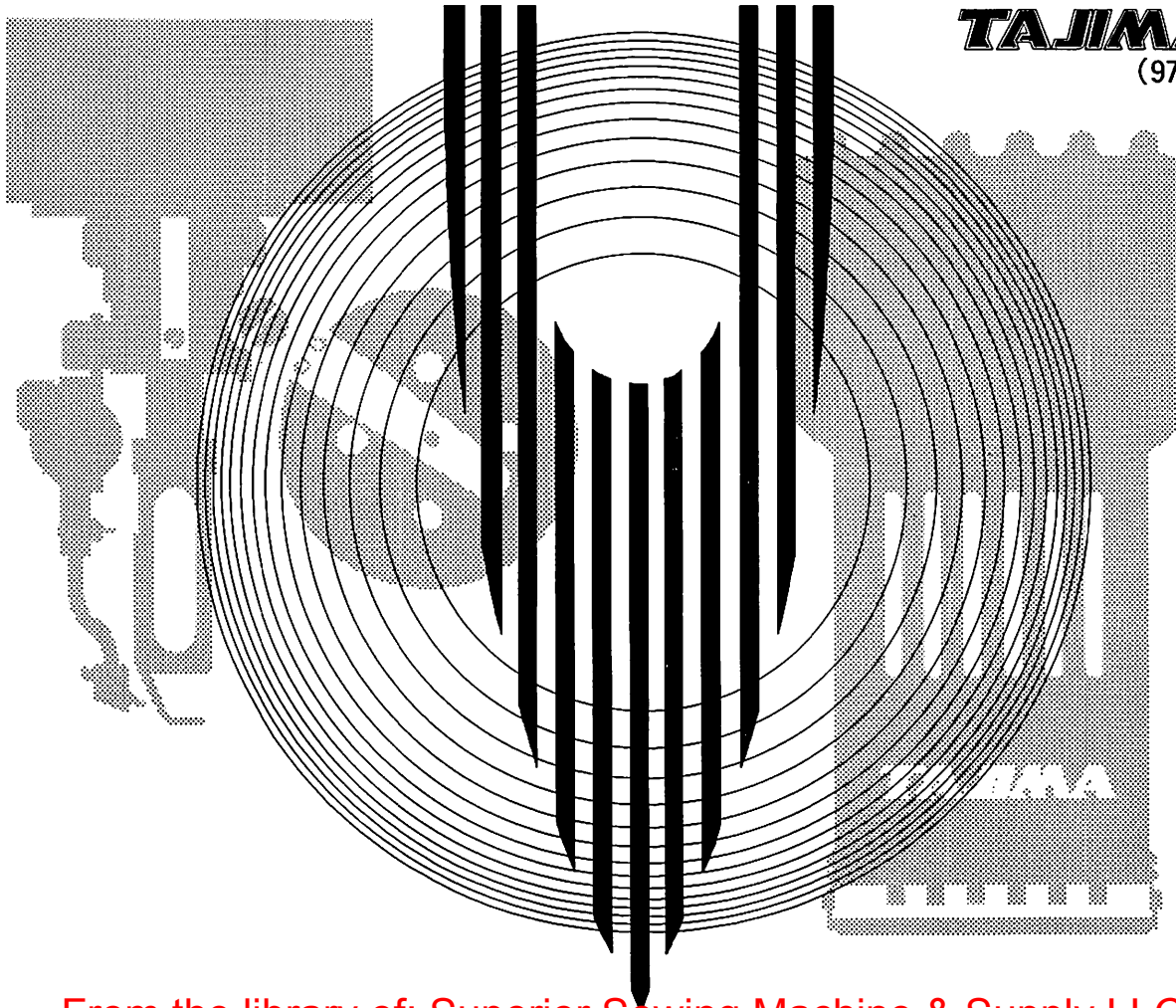

M-WHCD05-E

INTRODUCTION

This instruction Manual contains information on the procedure to make embroidery on caps or tubular goods possible with TME-DC Series machines.

Please read through this manual and understand the contents before operating the embroidery machine.

In addition to the wide cap frame, used for embroidery on caps, a semi-wide cap frame is optionally available. For the driving of these two kinds of cap frames, the same cap frame unit is used in common.

Major topics contained in this manual are:

IMPORTANT SAFETY INSTRUCTIONS

SWITCHING TO CAP FRAME SPECIFICATION

SWITCHING TO TUBULAR GOODS FRAME SPECIFICATION

Always keep this manual at hand whenever you need. Read also the manuals for optional devices for installing and operating them.

This manual may contain discrepancies in detailed information when compared with actual machine due to continued research and improvements. Even in such a case, there are no significant differences in details of operation and you can perform the required operation by referring to this manual. If any question about the machine or contents of this manual arises, please consult your local TAJIMA distributor.

Keep this Instruction Manual for future use.

IMPORTANT SAFETY INSTRUCTIONS

Operation of cap or tubular goods frames requires correct operation and appropriate settings to ensure safety.

Please read the IMPORTANT SAFETY INSTRUCTIONS in this manual carefully and do not attempt operation or maintenance of the machine before you thoroughly understand the items written under IMPORTANT SAFETY INSTRUCTIONS .

Items which require your special attention on operation and settings of the cap or tubular goods frames are specified following the warning symbol and signal word. These items must be strictly observed to ensure safety during operation and maintenance.

Signal word definition is given below.

⚠ **CAUTION** ..... Indicates a potentially hazardous situation which, if not avoided, may result in minor or moderate injury[NOTE 1] or property damage.

NOTE 1: An injury that dose not necessitate hospitalization or visit to a hospital over a long period.

The items which supplement the information given in the explanatory texts are described following [**REMARK**].

⚠ **CAUTION**

- **Make sure to turn off the power switch before performing the operation described in this manual (excludes adjustment of limit and proximity switches, and setting of parameters).**

  If you attempt the operation with the power switch on, the machine may operate unexpectedly to cause injury.

- **If the power switch is turned on to set parameters, for example, the switch must be turned off before performing the next operation.**

CONTENTS

(9611)

TUBULAR GOODS FRAME SPECIFICATION

[SWITCHING TO TUBULAR GOODS FRAME SPECIFICATION]

[APPENDIX]

SWITCHING FROM NORMAL EMBROIDERY FRAME TO THE CAP FRAME SPECIFICATION

[1] Removing the Normal Embroidery Frame

(1) Remove the attaching screw (a) and remove the bracket (b).

(2) Loosen the attaching screws (c) and remove the bracket (d).

(3) Remove the attaching screws (e) of the normal embroidery frame (f) and remove the normal embroidery frame (f) from the Z-spec. frame sash (g).

NOTE: To install the normal embroidery frame (f), follow the procedure given above in reverse order.

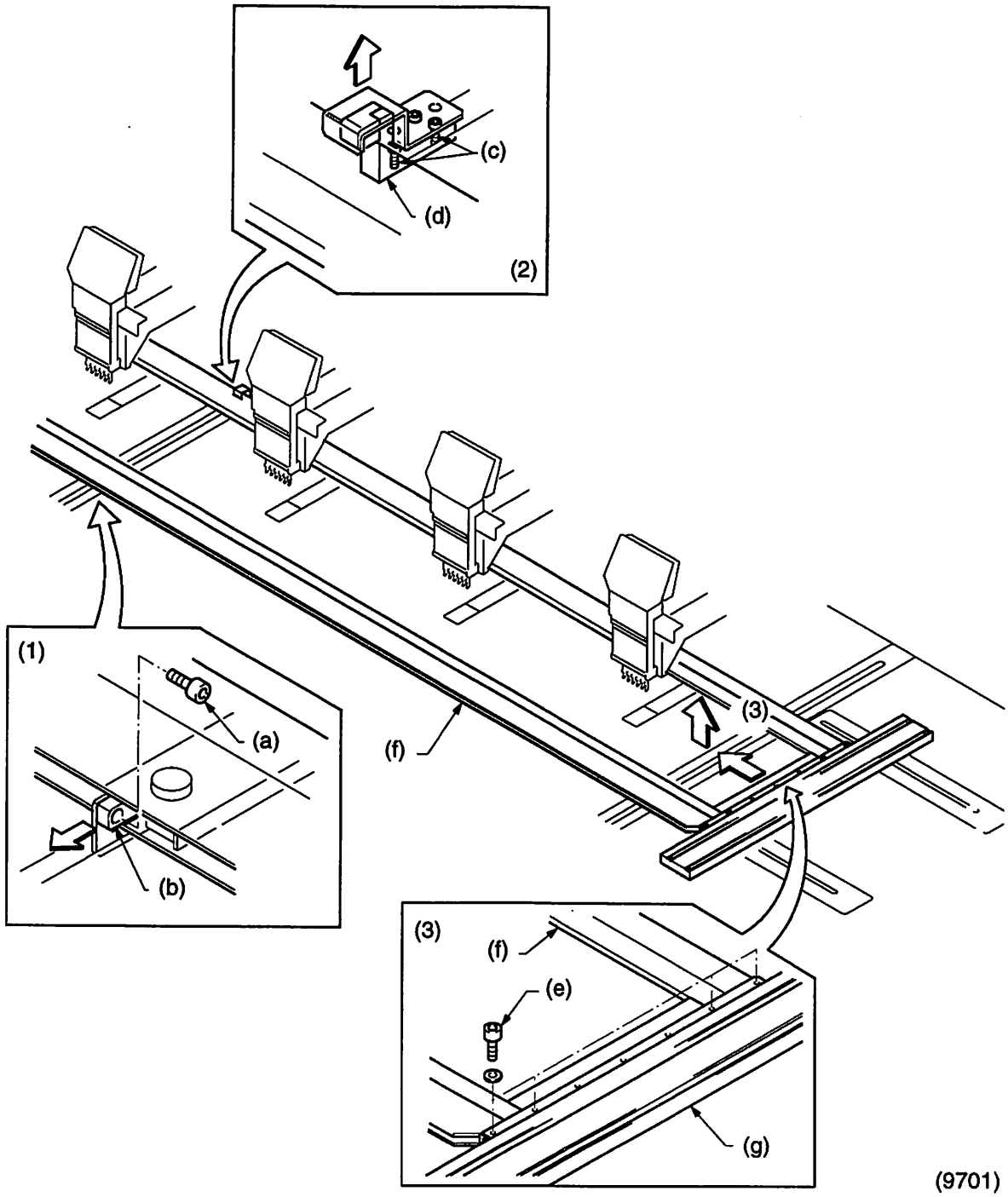

(9701)

[2] Checking DIP Switch Settings

Check the DIP switch "Table" of DSW2 on the IDM card in the controller box to see if the switch "Table" is set to ON.

[3] Setting Parameters (on the Operation Panel)

Procedure

Move the cursor to column [1] (MODE) in the 5th row.

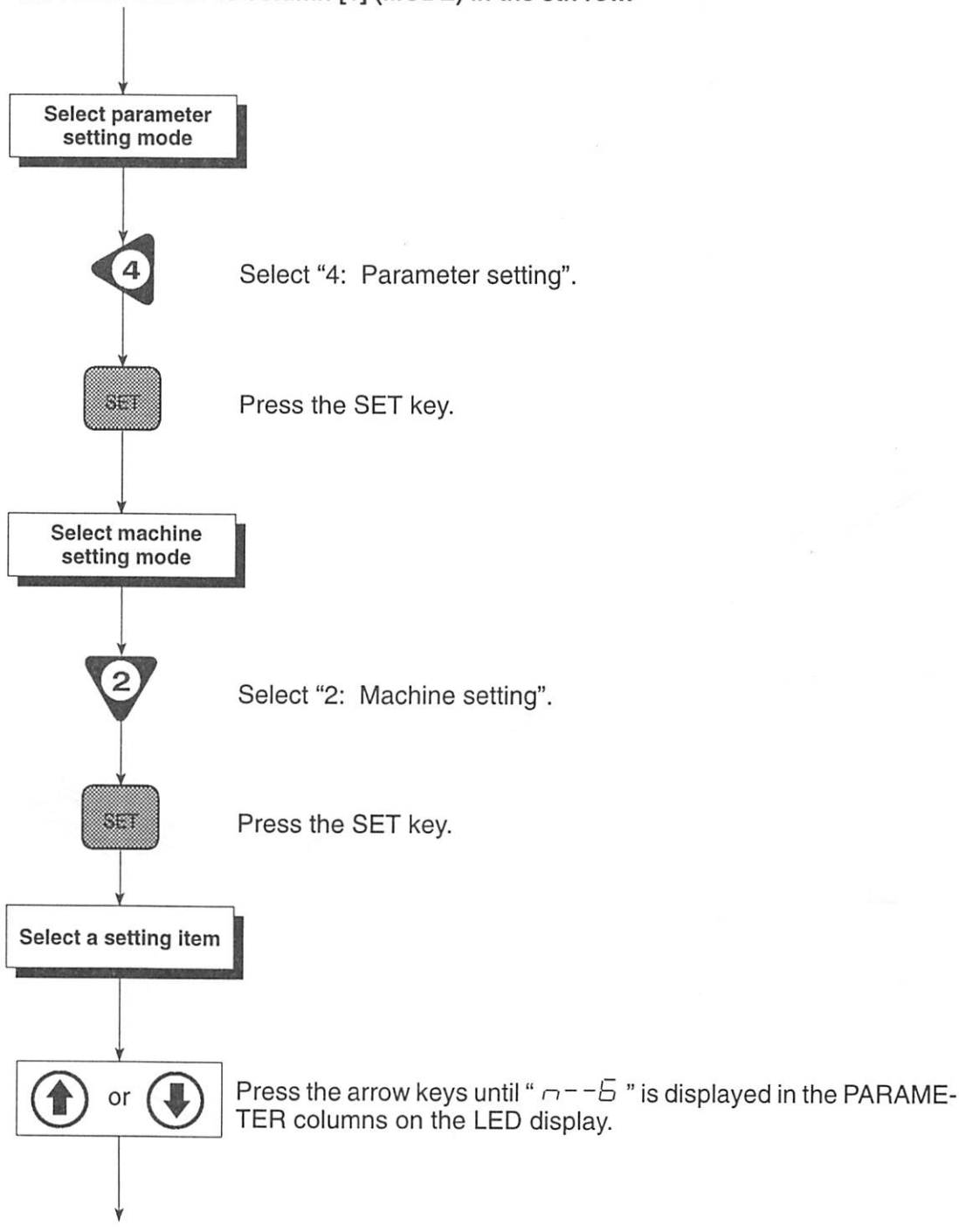

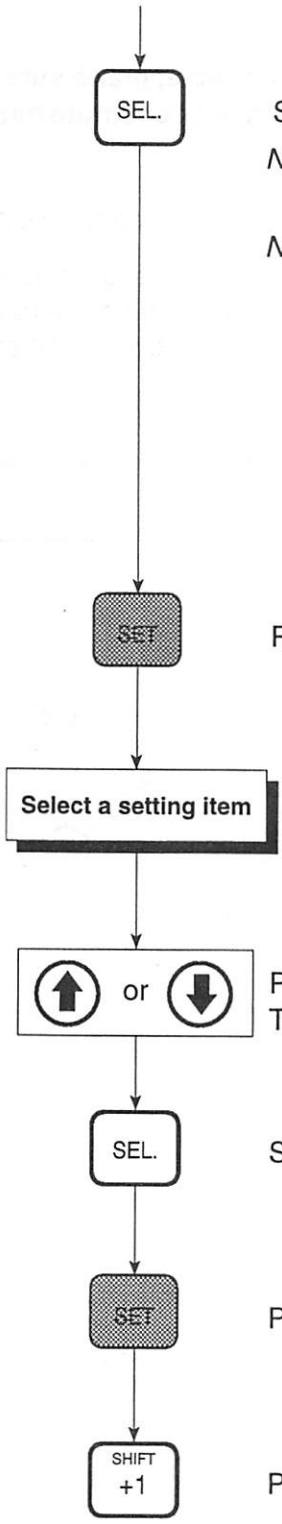

Select "WH: Wide cap frame"[NOTE 1, 2].

NOTE 1: When using a semi-wide cap frame, selection should also be "WH: Wide cap frame".

NOTE 2: When "WH: Wide cap frame" is selected, the machine speeds are restricted to ranges of 250 to 750 rpm for high-speed operation and 250 to 650 rpm for low-speed operation. Once the selection is made for "WH: Wide cap frame", the restrictions on machine speeds remain valid even if the frame selection is returned to "SF: Border frame". Accordingly, it is necessary to set the machine speed again as required after returning the frame setting.

Press the SET key.

Press the arrow keys until "n-12" is displayed in the PARAMETER columns on the LED display.

Select "1: Auto sub-table lifter is used".

Press the SET key.

Press the SHIFT key.

The above completes setting.

[4] Switching the Table

⚠ **CAUTION** **Before moving up/down the sub-table, make sure that intended sub-table operation does not constitute hazardous situation.**

(1) Separate the Y-axis feed connecting plate (a) from the driver connecting plate (b).

NOTE: After separation, pull the Y-axis feed connecting plate (a) to your side till it stops and hold it with a bearing stopper (c) at the table front edge. Push the driver connecting plate (b) fully to the machine till it stops.

(2) Release the toggle clamp (d).

NOTE: Release the toggle clamp (d) completely. Never stop it in the midway.

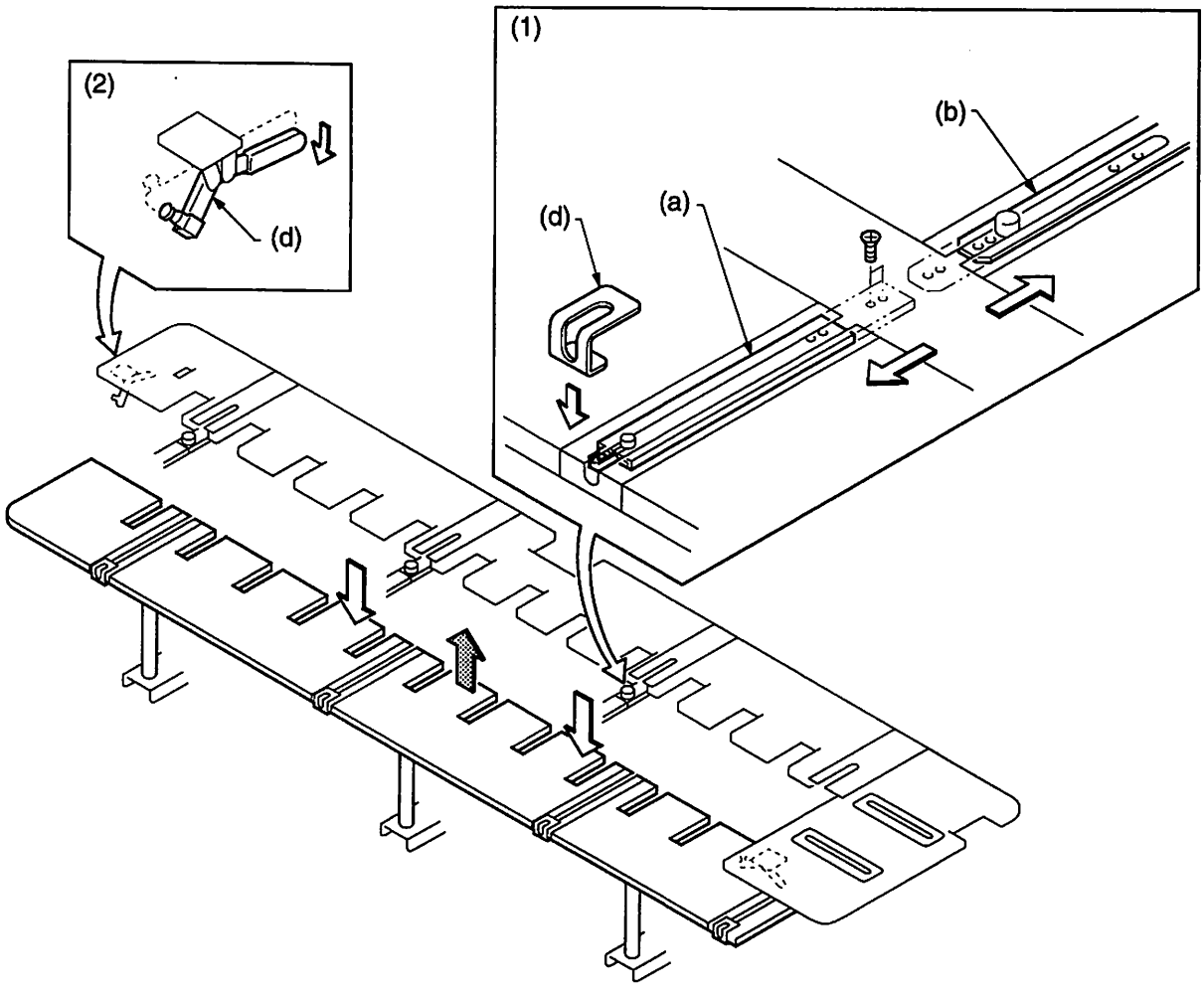

(3) Lower the sub-table by the key operation on the controller box.

Procedure

Move the cursor to column [1] (MODE) in the 5th row.

Select sub-table up/ down and lubrication mode

5 — Select "5: Sub-table up/down and lubrication (OILING)".

SET — Press the SET key.

2 — Press this key until the sub-table lowers and stops at the lowest position.

REMARK: Sub-table up/down operation is not possible while the machine is operating.

Press the START key.

The above completes setting.

To lift the sub-table, follow the procedure given above in reverse order.

To lift the sub-table, keep pressing the 8 key instead of the 2 key.

[5] Replacing the Needle Plate

Remove the normal/tubular goods frame needle plate (a), and install a wide/semi-wide cap frame needle plate (b).

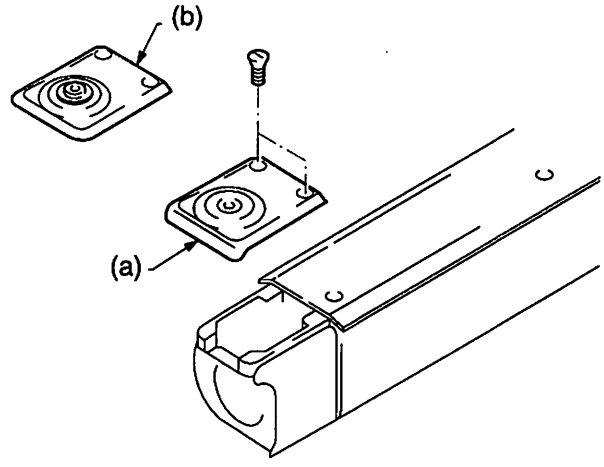

[6] Installing the Cap Frame Unit

REMARK: If the cap frame unit has not been assembled, assemble the unit following the procedure given in "Assembling the Cap Frame Unit" on pages 1 – 16.

(1) Install the cap frame unit (c) so that the drive ring (a) fits on the bed (b).

(2) Secure the Y-axis base sash (d) lightly to the driver connecting plate (g) by using attaching screws (f).

(3) Check the direction of the slide base (h) so that the "WH" attaching position labels on the slide base (h) and the Z-spec. frame sash (i) match, and then secure the slide base (h) lightly to the Z-spec. frame sash (i) by using attaching screws (e) *[NOTE]*.

NOTE: Use the screws (hexagon socket head cap screw M5 × 12) which have been removed in the procedure given in "[1] Removing the Normal Embroidery Frame" on page 1 – 1 or "Removing the Tubular Goods Frame Base Sash" on page 2 – 1.

(4) Tighten the attaching screws (f) and (e) in the respective order to securely hold the cap frame unit and the driver in place.

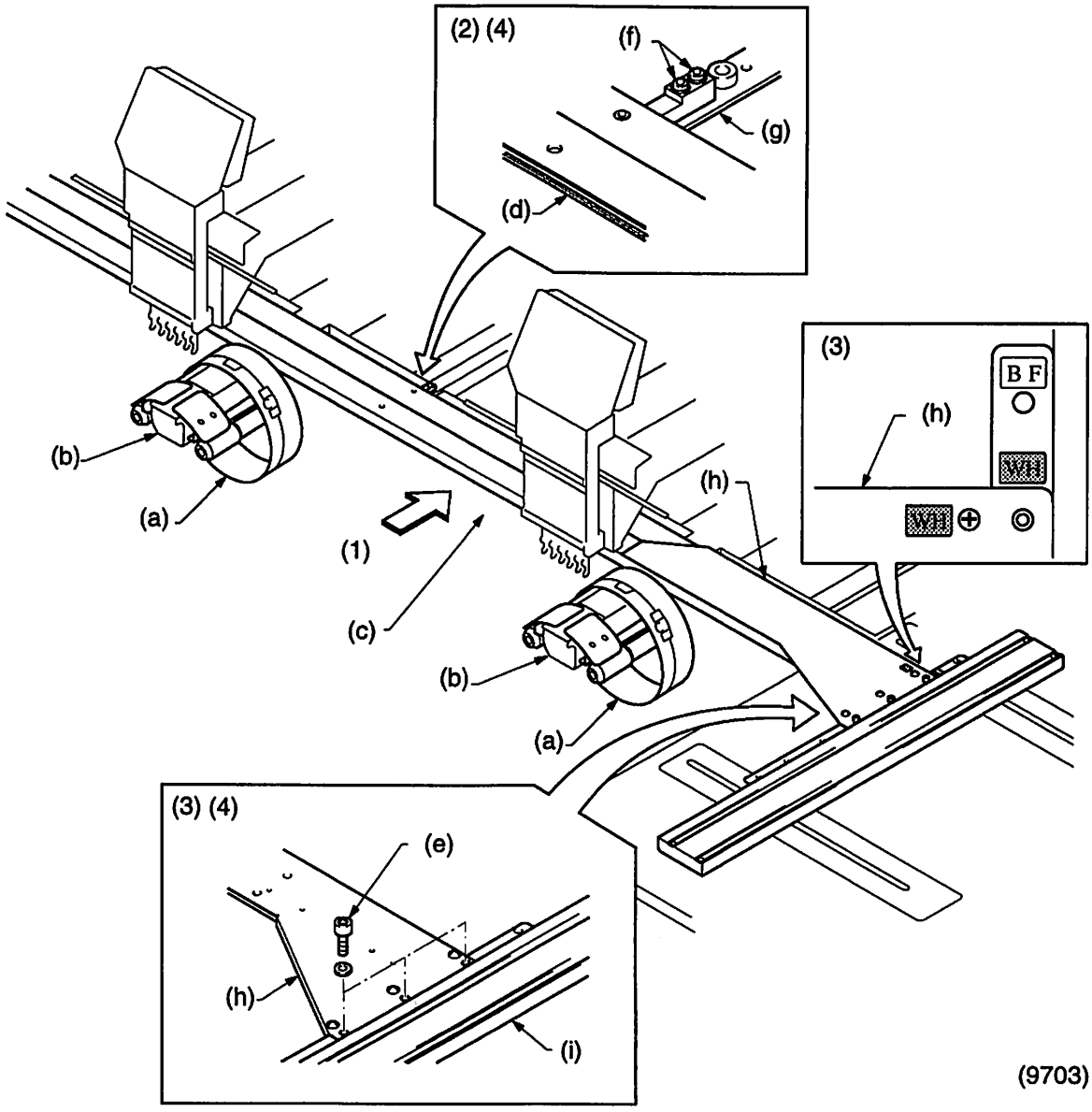

(9703)

(4) Check if the projection (m) of the wide/semi-wide cap frame needle plate (k) is positioned at the center of the needle plate guides (n), and also check if the felt beneath the needle plate guide (n) contacts lightly the top surface of the wide/semi-wide cap frame needle plate (k).

If it is not positioned at the center nor contacting lightly, loosen the drive base (o) attaching screws (p) (4 screws) and adjust the position of the drive base (o).

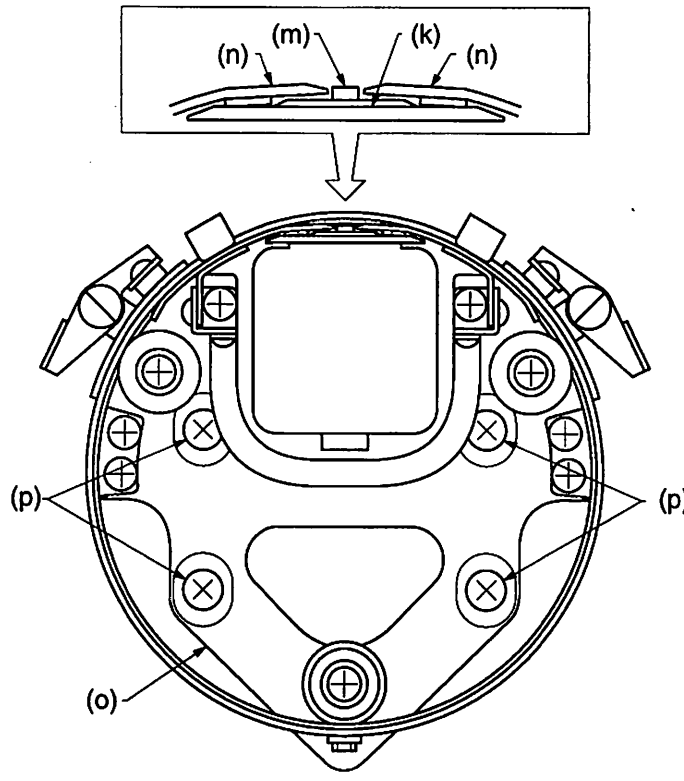

[7] Adjusting the Drive Wire Tension

(1) Loosen the attaching screws (a) and loosen the drive wire (b).

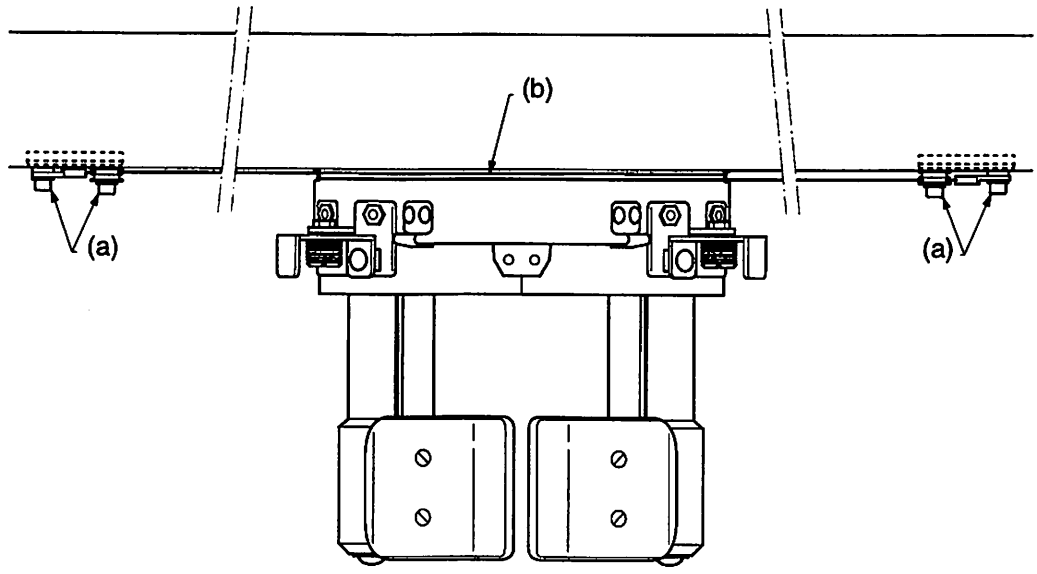

(2) Set the embroidery space indicator so that it aligns with the center (+) mark between the cap frame embroidery space marking lines provided on the table.

(3) Turn the drive ring (c) and align the center mark (d) with the needle location.

(4) Align the outside surface of the left side slide nut (e) with the punched hole (g) in the top surface of the slide angle (f), and tighten the attaching screws (a).

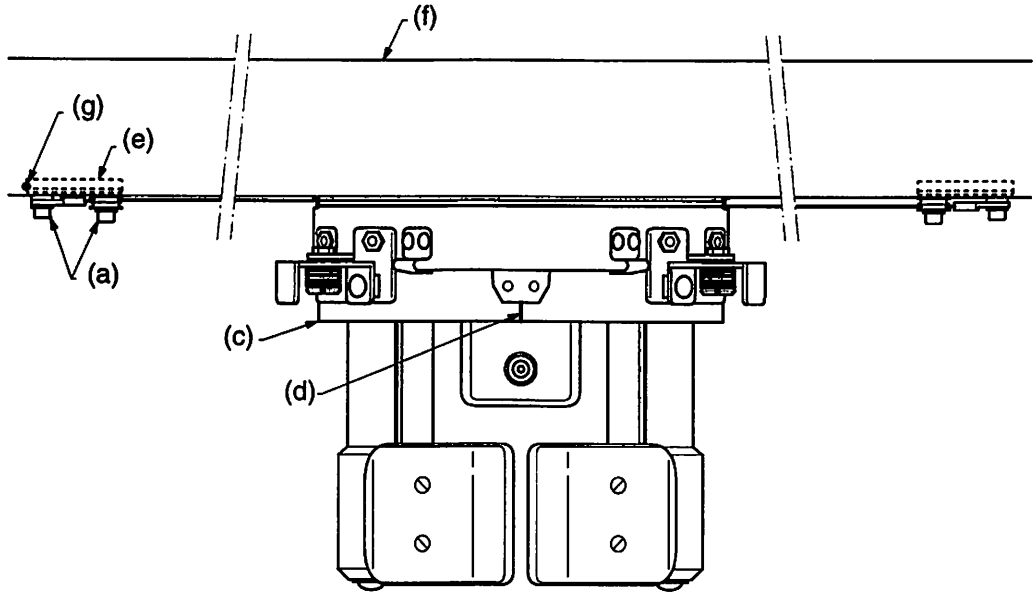

(5) Turn the tension nut (h) of the wire tension gauge to move the tension block (i) to the innermost position. And then, loosen the wing screw (m) of the tension block (k).

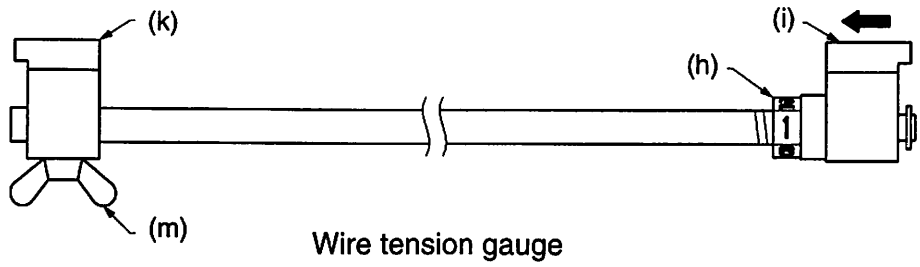

Wire tension gauge

(6) Put the wire tension gauge between the slide nuts (e), and make the tension block (i) contact with the inside edge of the right side slide nut (e). In this condition, make the tension block (k) contact with the inside edge of the left side slide nut (e), and, while keeping the drive wire (b) lightly tensed, tighten the wing screw (m).

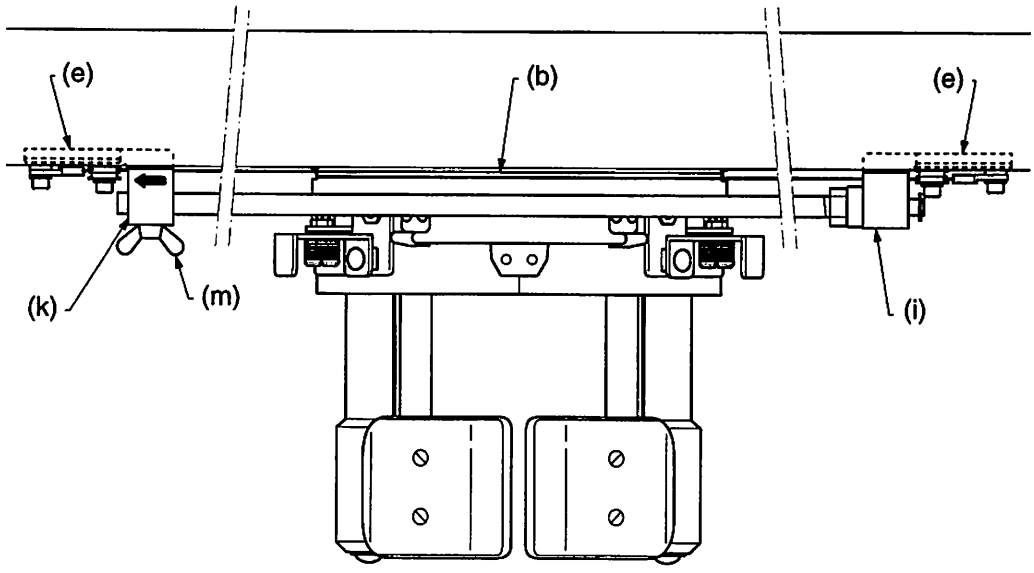

(7) Turn the tension nut (h) 4/6 turn [NOTE] to move the tension block (i) to the outside, and tighten the attaching screws (a) of the right side slide nut (e).

NOTE: Use the numbers marked on the tension nut (h) as the reference for making the 4/6 turn.

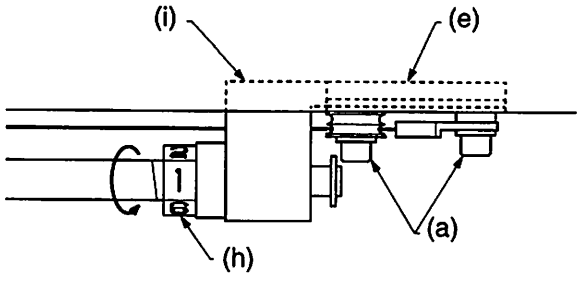

(8) Check the drive ring (c) alignment if its center mark (d) is aligned with the needle location.

If it is not aligned, loosen the fixing screw of the wire fixing fitting (n) and turn the drive ring (c) to align it with the needle location.

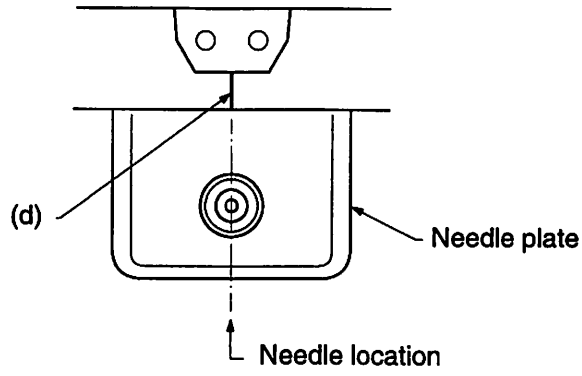

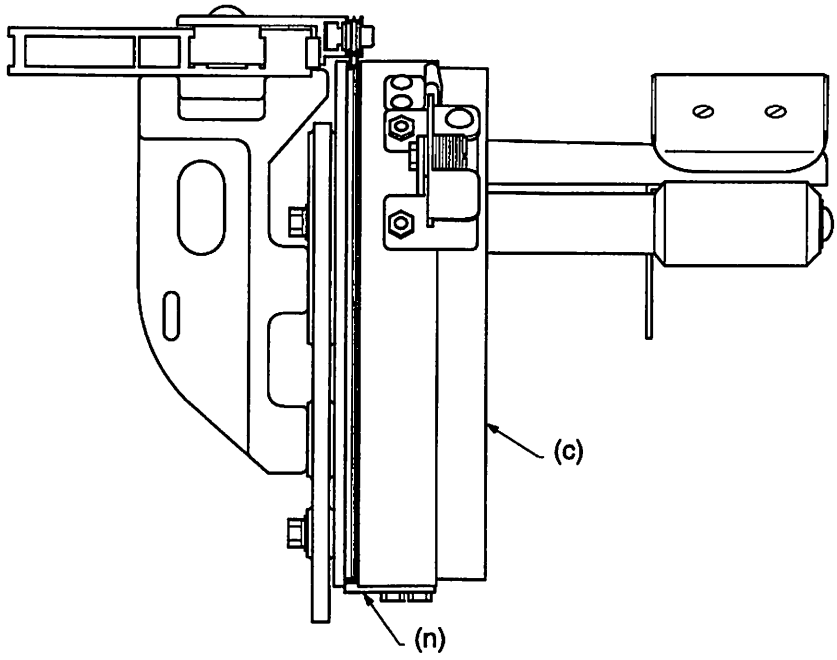

NOTE: To secure the wire fixing fitting (n), make the ends of the drive wire (b) cross each other at the fitting as shown below.

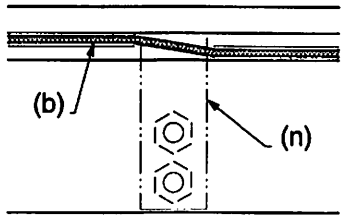

[8] Installing the Cap Frame Guide

(1) Loosen the hook guide (a) attaching screws (b) (two screws).

(2) Insert the wide cap frame guide (c) attaching part between the hook guide (a) and the attaching screws (b), and tighten the attaching screws (b) to secure the guide.

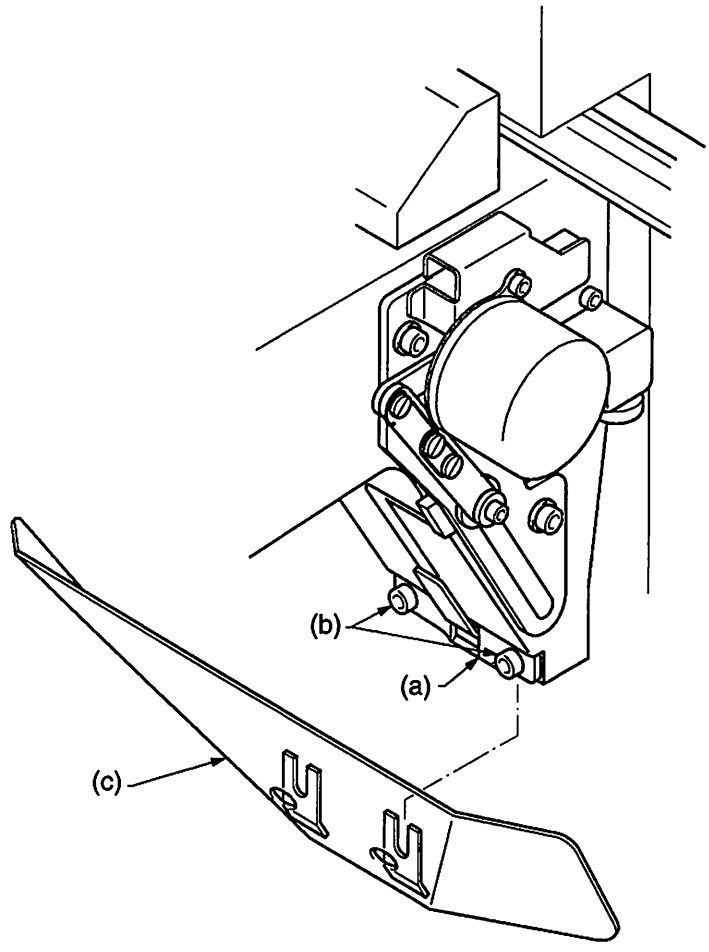

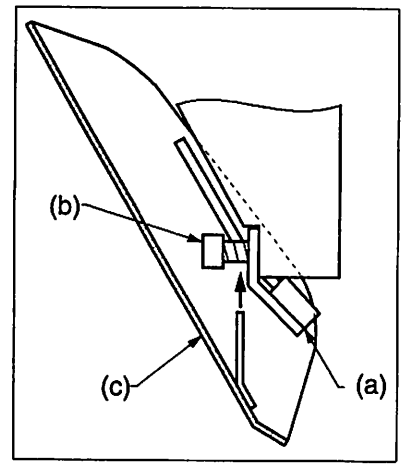

[9] Adjusting the Base Holder Roller Position

Loosen the hexagon socket head cap screws (a) (two) and lift up the base holder shaft (b). Adjust the base holder roller (c) position so that it contacts lightly the bottom surface of the rail (d) in the bottom of the bed and so that the base holder shaft (b) is positioned horizontally, and then, tighten the hexagon socket head cap screws (a).

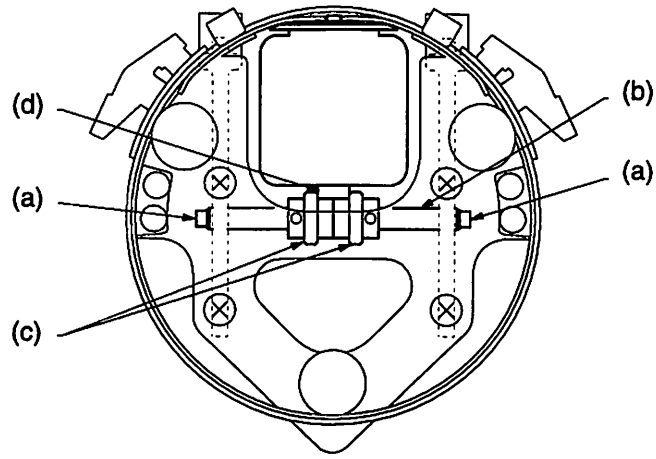

[10] Adjusting the X-/Y-axis Driver Limit Switches and Proximity Switches

Adjust the positions of the **X-/Y-axis driver limit switches** (frame limit switches) and **proximity switches** (frame limit origin sensors) by moving the cap frame right and left or back and forth manually so that the frame is moved without coming into contact with a needle; secure them at the adjusted positions.

[Machine Viewed from the Top]

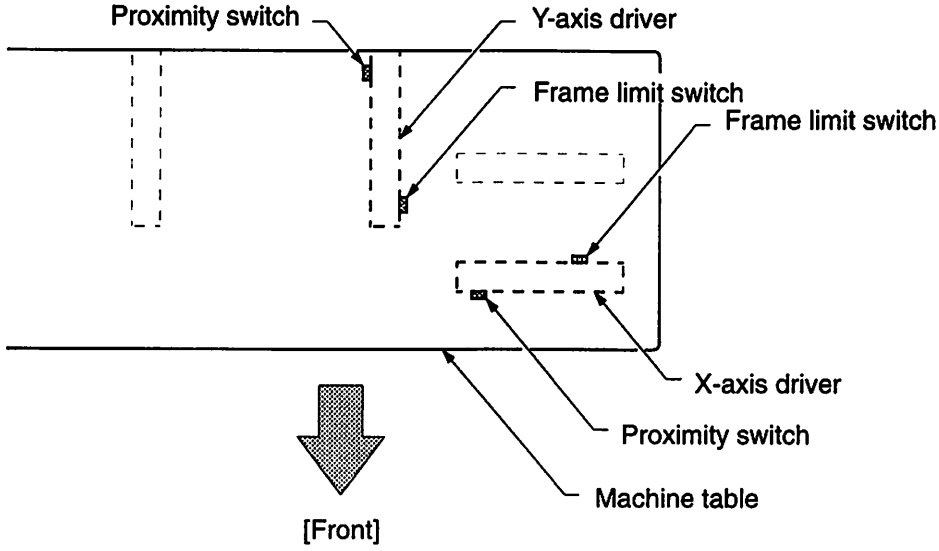

[11] Setting the Frame Limit Origin

Procedure

Move the cursor to column [1] (MODE) in the 5th row.

Select parameter setting mode

4 — Select "4: Parameter setting".

SET — Press the SET key.

Select machine setting mode

2 — Select "2: Machine setting".

SET — Press the SET key.

Select a setting frame limit origin

↑ or ↓ — Press the arrow keys until "n – 18" is displayed in the PARAMETER columns on the LED display.

Setting operation

1 — Select "1: Frame limit origin memory".

(9611)

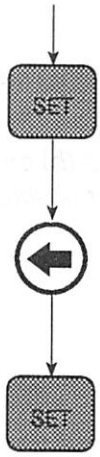

Press the SET key.

Press the START key.

Press the SET key. → The frame moves to the frame limit origin position once and then returns to the previous position.

The above completes setting.

* The beeper will sound three times and the cursor will move the parameter number "n-19".

• Assembling the Cap Frame Unit

(1) Attach lightly the drive ring unit (a) to the Y-axis base sash (c) using four hexagon socket head cap screws (b) (M5 × 25).

NOTE: To attach the two hexagon socket head cap screws (b) on the front side, slide the slide angle (d) and put the screw through the screw through the hole (e).

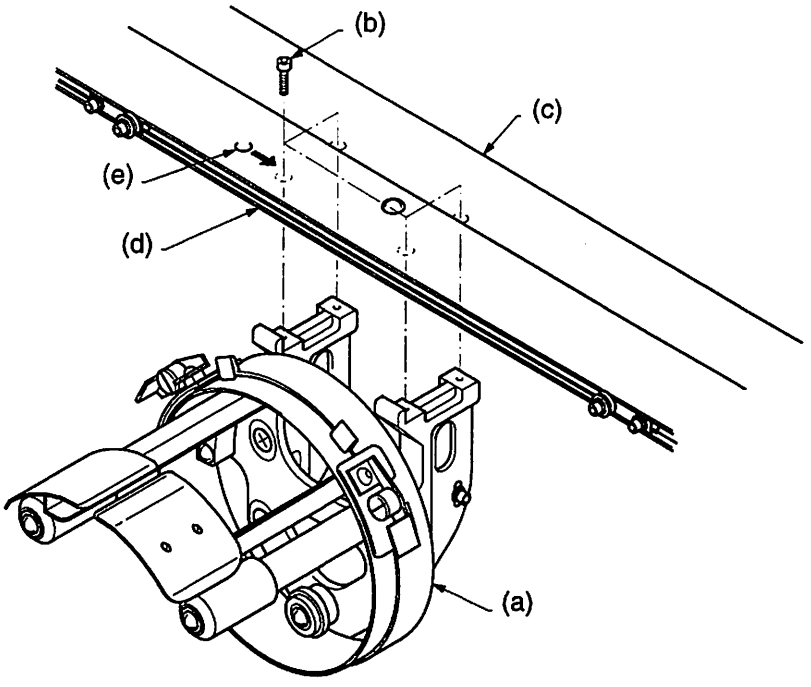

(2) Tighten the hexagon socket head cap screws (b) with the rear edge (g) of the stepped part of the base bracket (f) being contacted with the front edge of the Y-axis base sash (c).

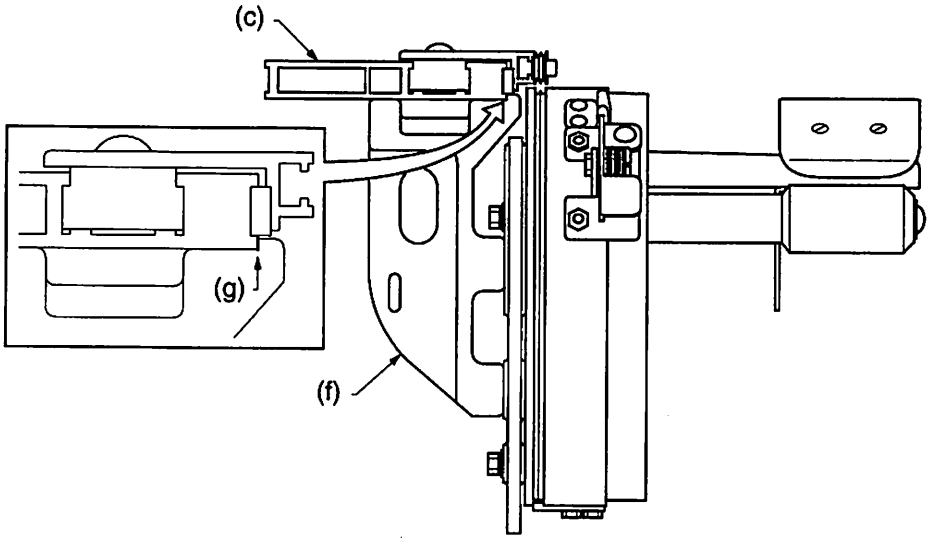

■ Installing the drive wire

(1) Remove the attaching screws (a) and loosen the attaching screws for the wire guide ring (b).

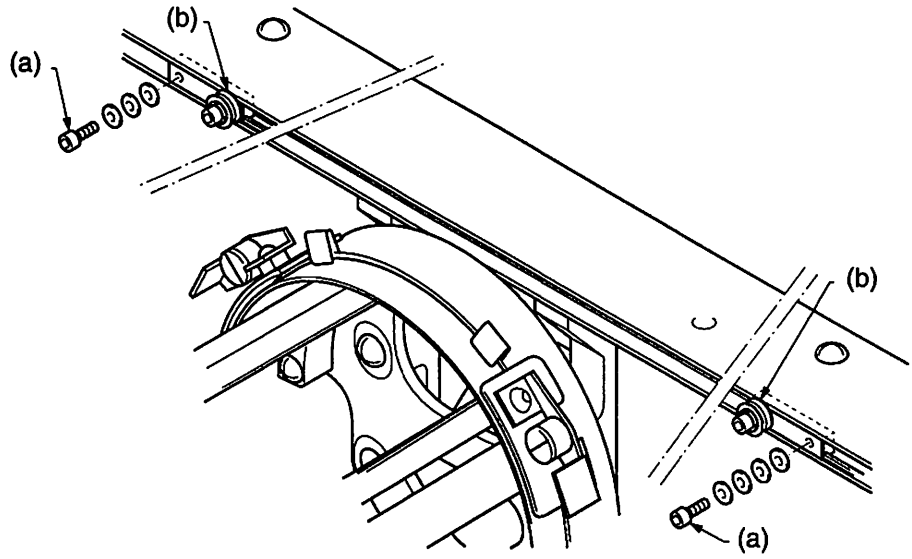

(2) Wind the drive wire (c) one turn around the drive ring (d), and secure lightly the attaching parts (e) on the both ends in the correct direction by using the attaching screws (a).

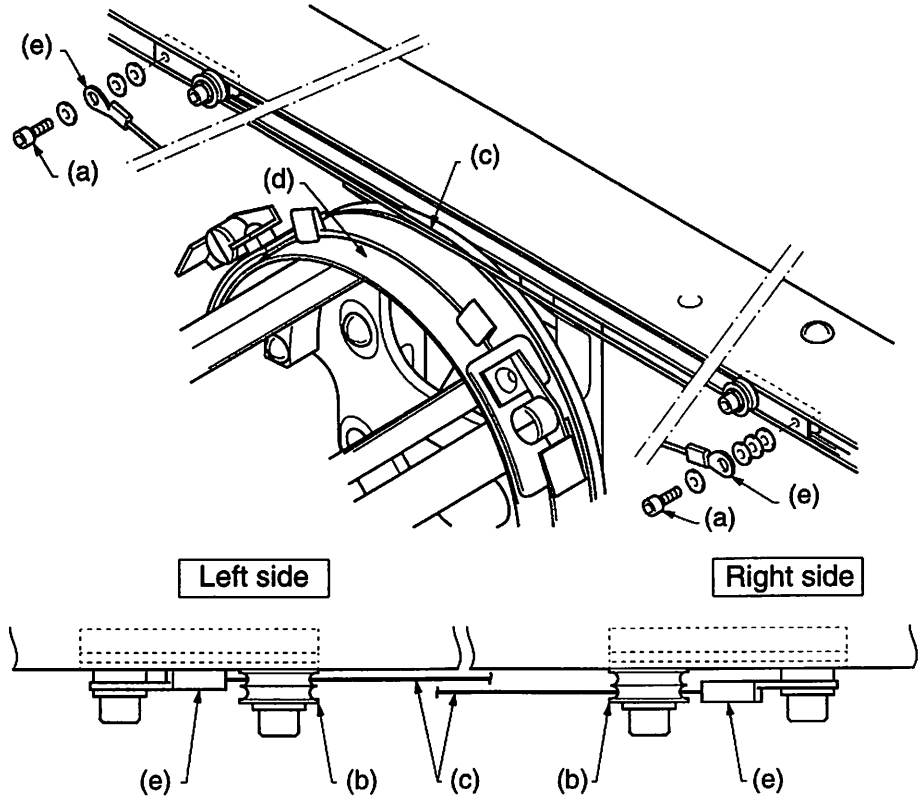

NOTE: Refer to the next page for the machine whose head intervals are less than 500 mm.

(9504)

NOTE: On a machine with the head intervals less than 500 mm, the left attaching part of the drive wire B and the right attaching part of the drive wire C are positioned between the right and left attaching parts of the drive wire A.

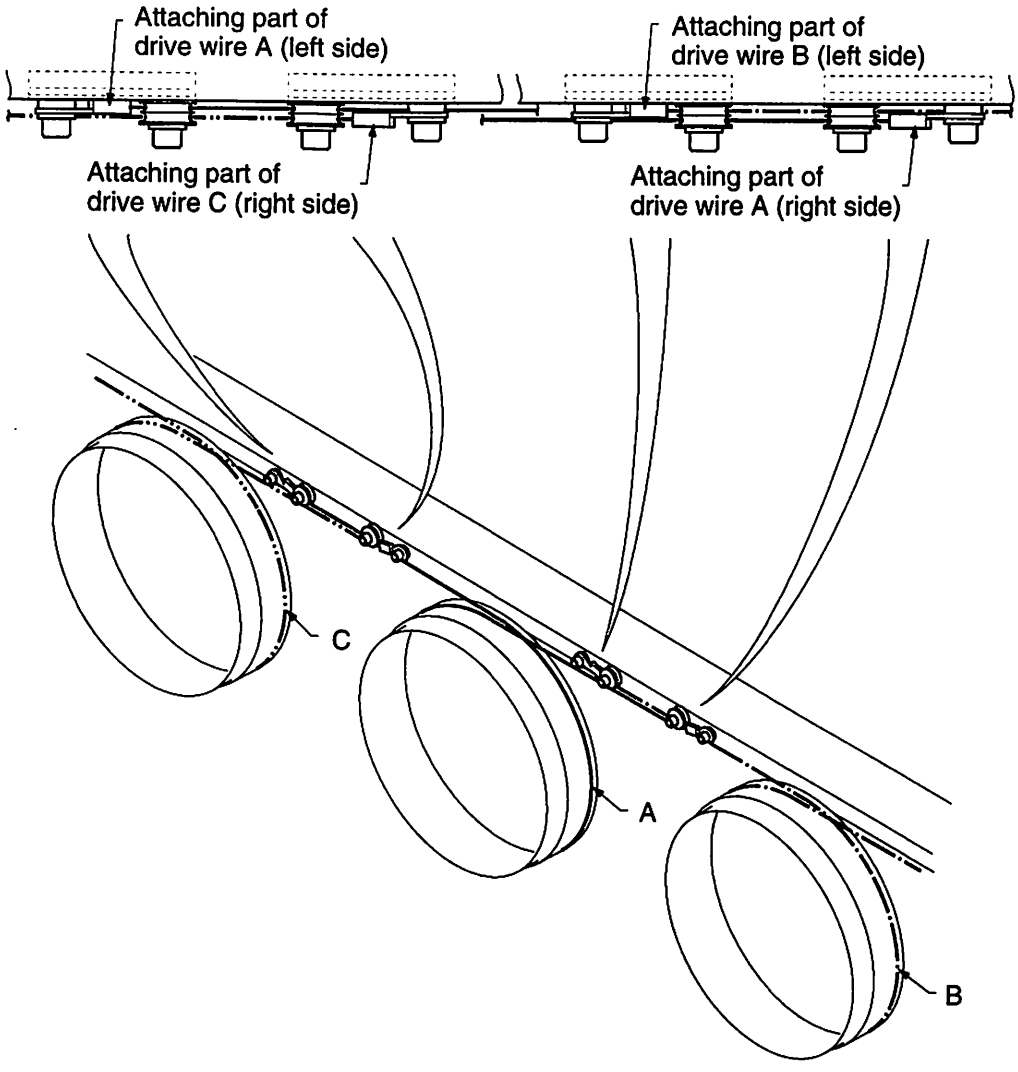

SWITCHING FROM TUBULAR GOODS FRAME TO CAP FRAME

Removing the Tubular Goods Frame Base Sash

(1) Loosen the attaching screws (a), (b), and (C), and remove the float-preventive arm set (d) from the driver connecting plate.

(2) Remove the attaching screw (e) and detach the slide base (f) from the Z-spec. frame sash (g).

(3) Remove the tubular goods frame base sash (h).

(4) Remove the spacer pin (i) from the driver connecting plate (k).

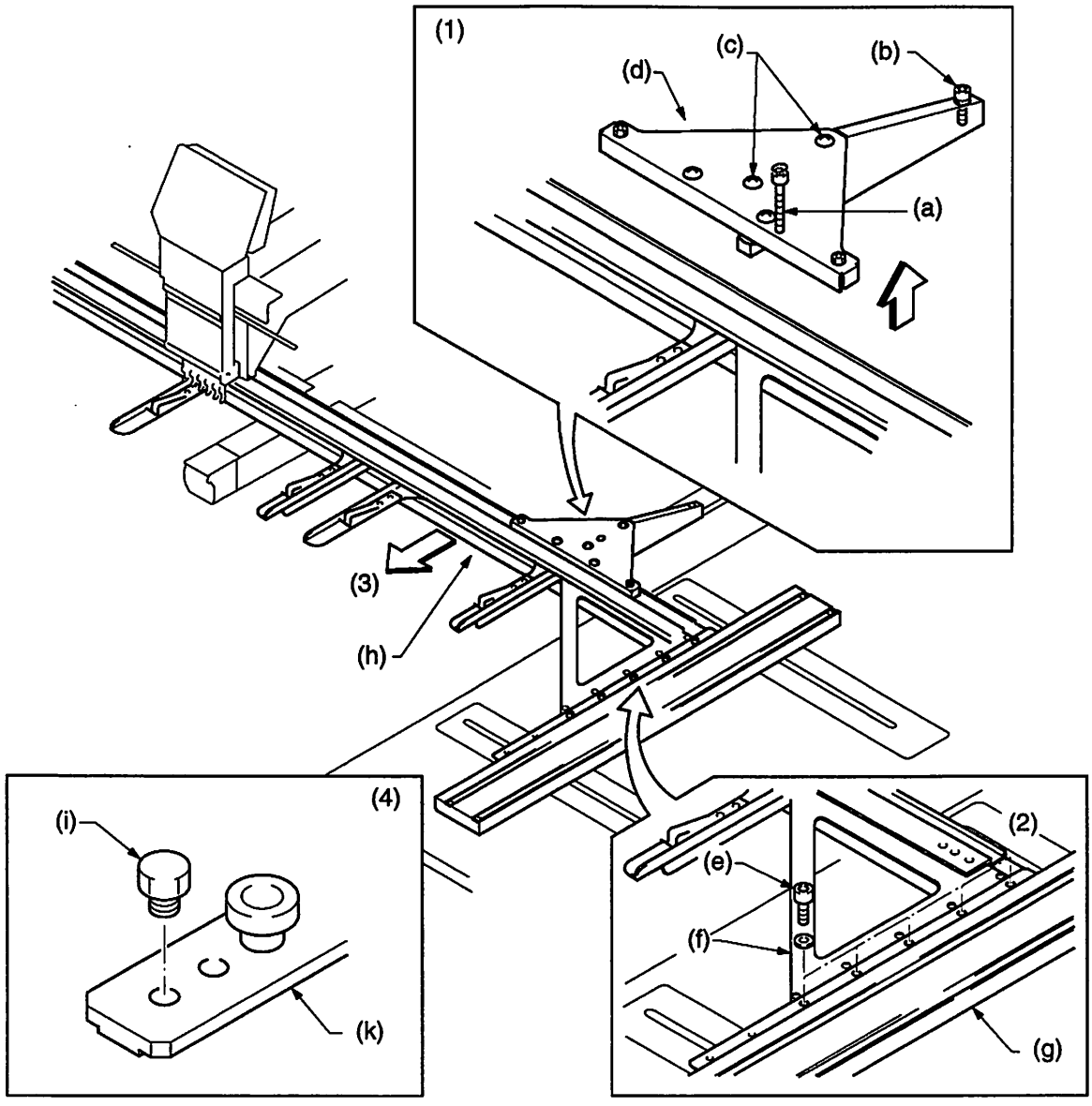

NOTE: After removing the tubular goods frame base sash, follow the steps indicated in [2] Checking DIP Switch Settings (page 1 – 2) and later sections. Note that the operation explained in [4] Switching the Table (page 1 – 4) is not necessary.

(9701)

ADJUSTING THE FRAME TO THE CAP SIZE (HEIGHT)

[A] Using The Wide Cap Frame

Adjust the needle plate guide (a) according to the cap size (height).

Adjustment can be made within a 20 mm range in units of 5 mm by shifting the guide bracket (c) (two positions) with respect to the guide base (b) and by shifting the needle plate guide (a) (three positions) with respect to the guide bracket (c).

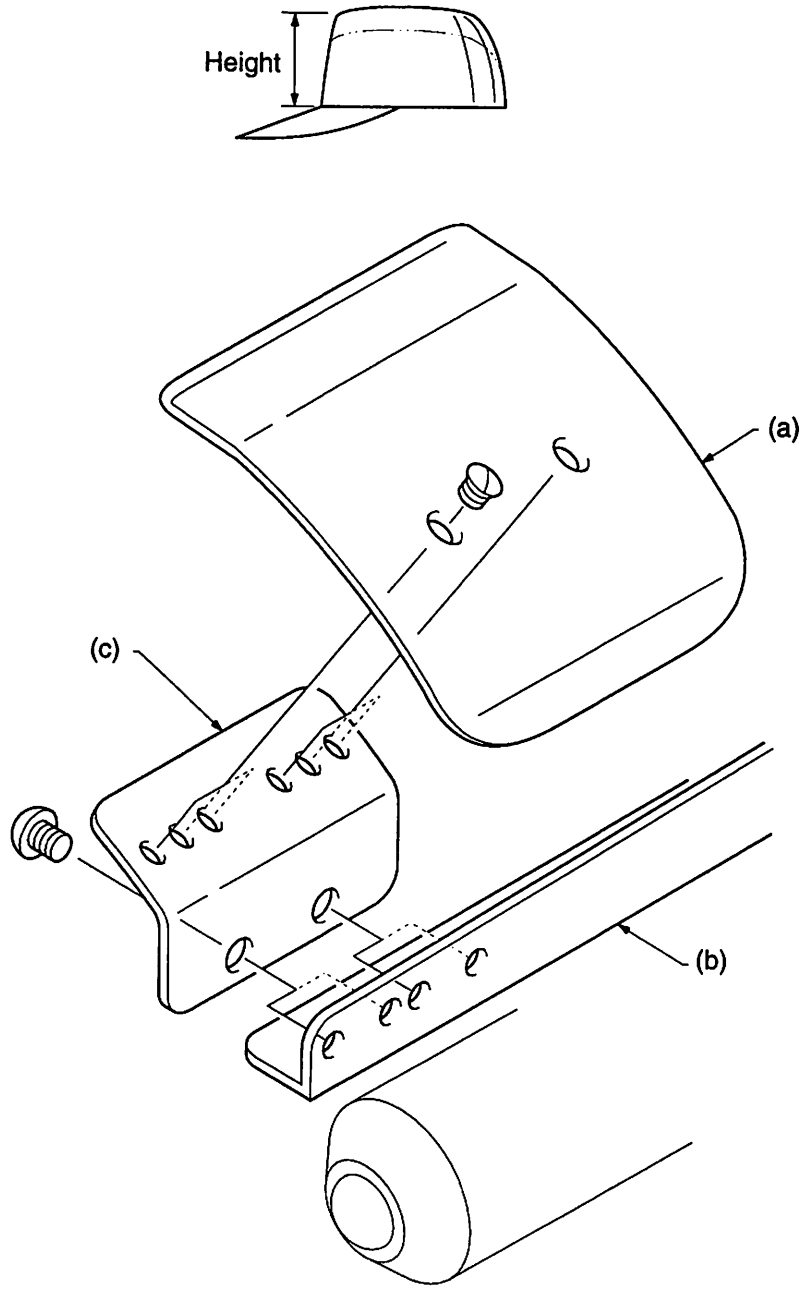

[B] Using The Semi-Wide Cap Frame

(1) Adjust the needle plate guide (a) position following the same procedure as described in [A] "Using the Wide Cap Frame" (page 3 – 1).

(2) Remove the base frame "B" set (b) by unfastening the set screws (a).

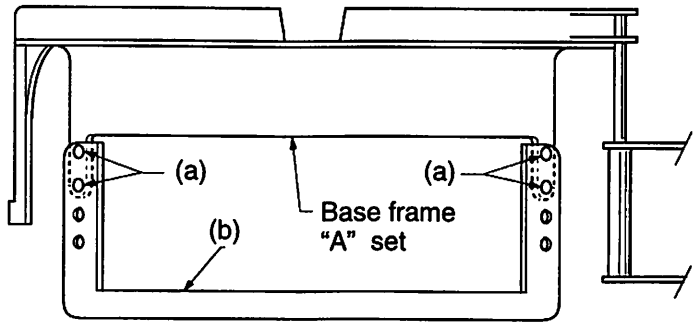

(3) Install the base frame "B" set at the position which matches the cap size (height).

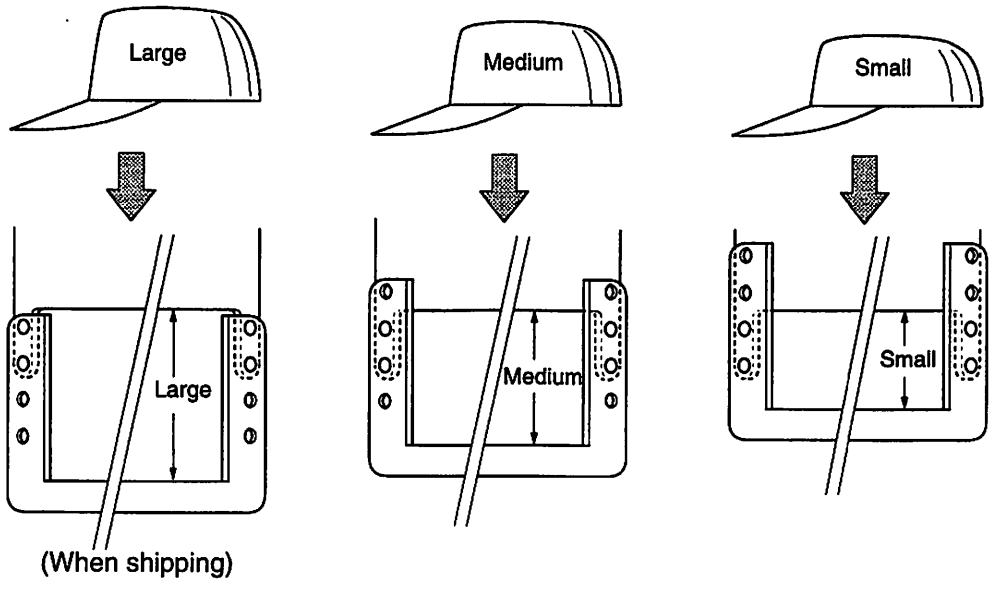

(4) Loosen the four wing nuts (a) and adjust lid frame "A" (b) to the size of the base frame "B " (c) which was adjusted in (3) above by sliding it in the directions indicated by the arrows. Then, after adjustment, secure it by retightening the wing nuts (a).

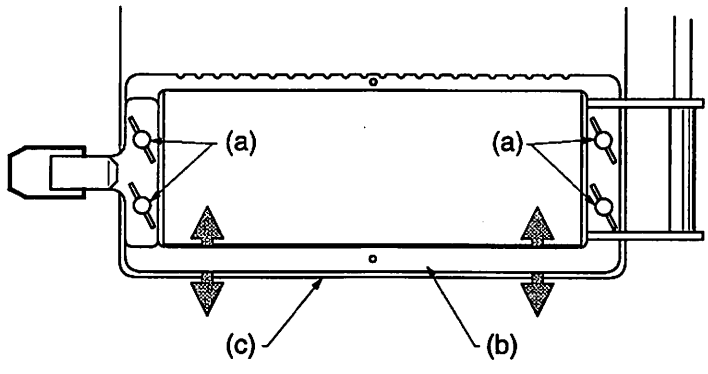

ADJUSTING THE CAP FRAME TO THE THICKNESS OF THE MATERIAL

⚠ **CAUTION**

Adjust the size of the lid frame meeting the cap material thickness.

Unless the size is not adjusted to the cap material thickness, it may cause damage to the frame and/or design displacement.

[A] Using The Wide Cap Frame

(1) Remove the hexagon nuts (a) (2 nuts) and remove the pinch lock (b) from the lid frame (c).

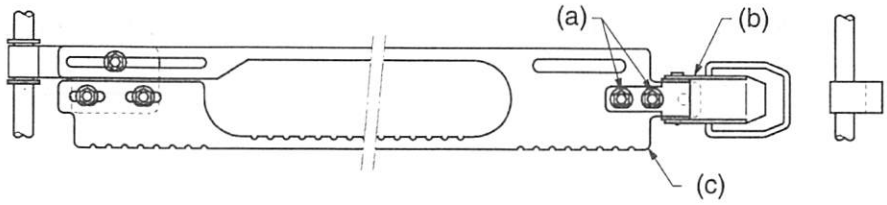

(2) Install the pinch lock (b) so that the cap is held securely by the lid frame.

If the cap material is thin

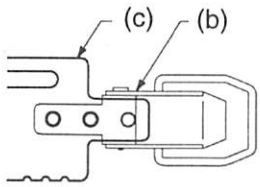

Secure the pinch lock (b) by using two inner holes of the lid frame (c).

If the cap material is thick

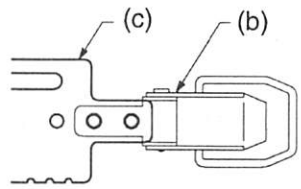

Secure the pinch lock (b) by using two outer holes of the lid frame (c).

(3) Loosen the hexagon nuts (d) (3 nuts) and adjust the tightness of the pinch lock (b) when a cap is set.

NOTE: In this adjustment, give allowance to side (e) of the lid frame (c) so that it comes above the visor support bracket. See page 5 – 1.

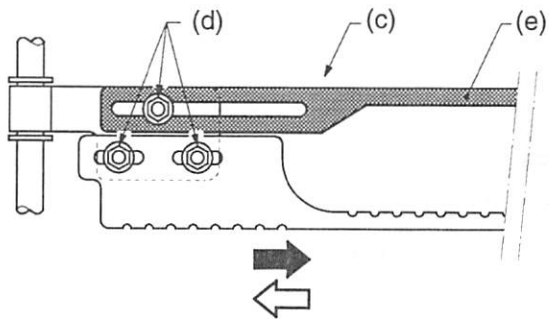

If the pinch lock is too tight

Slide the lid frame (c) in the direction of the black arrow as shown above and secure it.

If the pinch lock is too loose

Slide the lid frame (c) in the direction of the white arrow as shown above and secure it.

(9611)

[B] Using The Semi-Wide Cap Frame

(1) Remove the pinch lock (b) from the clamp base (c) by removing the hexagon nuts (a).

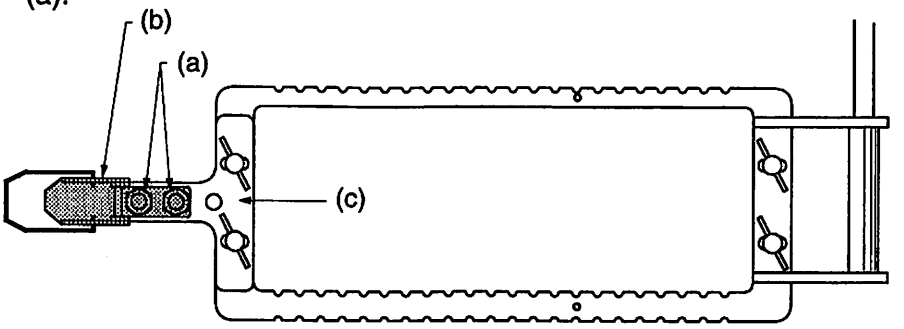

(2) Install the pinch lock (a) at the position which matches the thickness of the material.

When the material is thin

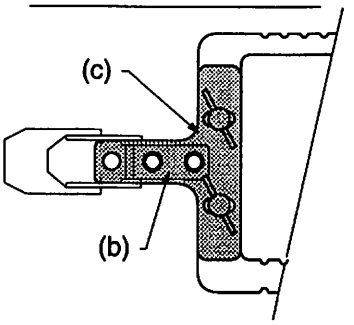

- Secure the pinch lock (b) by using the inner two holes in the clamp base (c).

When the material is thick

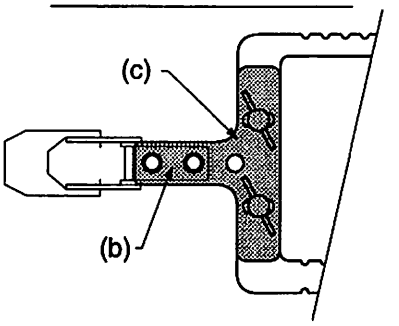

- Secure the pinch lock (b) by using the outer two holes in the clamp base (c). (When shipped)

(3) Loosen the wing nuts (d) to adjust the tightness of the pinch lock (b) when the cap frame has been set.

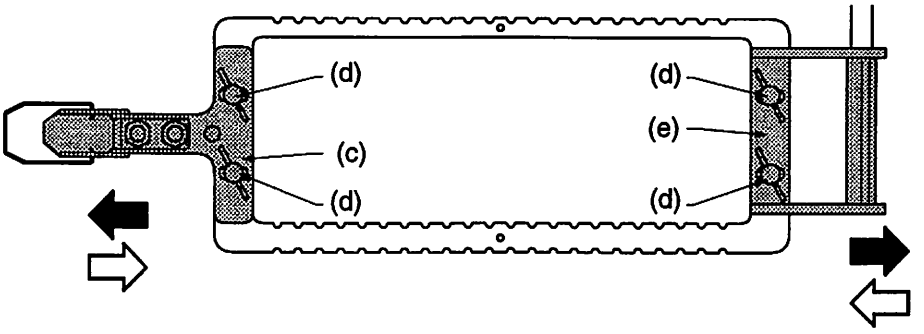

When the pinch lock is too tight

Slide the clamp base and the lid frame fitting in the directions indicated by the black arrows and secure them.

When the pinch lock is too loose

Slide the clamp base and the lid frame fitting in the directions indicated by the white arrows and secure them.

INSTALLING THE CAP FRAME

[A] Using The Wide Cap Frame

(1) Open the lid frame (a) and put a cap on the base frame (c) with the sweatband (b) turned inside out.

(2) Adjust the position of the cap where the bottom of the cap's visor touches the lid frame (a) so the cap is correctly balanced and positioned.

(3) When the cap is correctly positioned, close and lock the lid frame (a).

NOTE: When closing the lid frame (a), make sure that side (i) of the lid frame (a) comes above the visor support bracket (k).

(4) Hold the bottom of the cap by using clips (d) and clip holder (e).

NOTE: Procedures in (1), (2), (3), and (4) above are performed on the setting frame.

(5) Install the cap frame, on which the cap is now set, to the drive base (f).

When installing the cap frame to the drive base (f), turn the base frame (c) to the right or left so the visor section does not touch the arm of the embroidery machine nor the cap frame guide.

After securing the cap frame, push lightly on the lock pins (g) of the attaching/detaching lever (h) to make sure it is firmly secured.

NOTE: After finishing the embroidery, push down the attaching/detaching levers (h) to release the lock pins (g), and pull the cap frame out towards you to detach it from the lock pins (g). Remove the cap frame by reversing the procedures in (5).

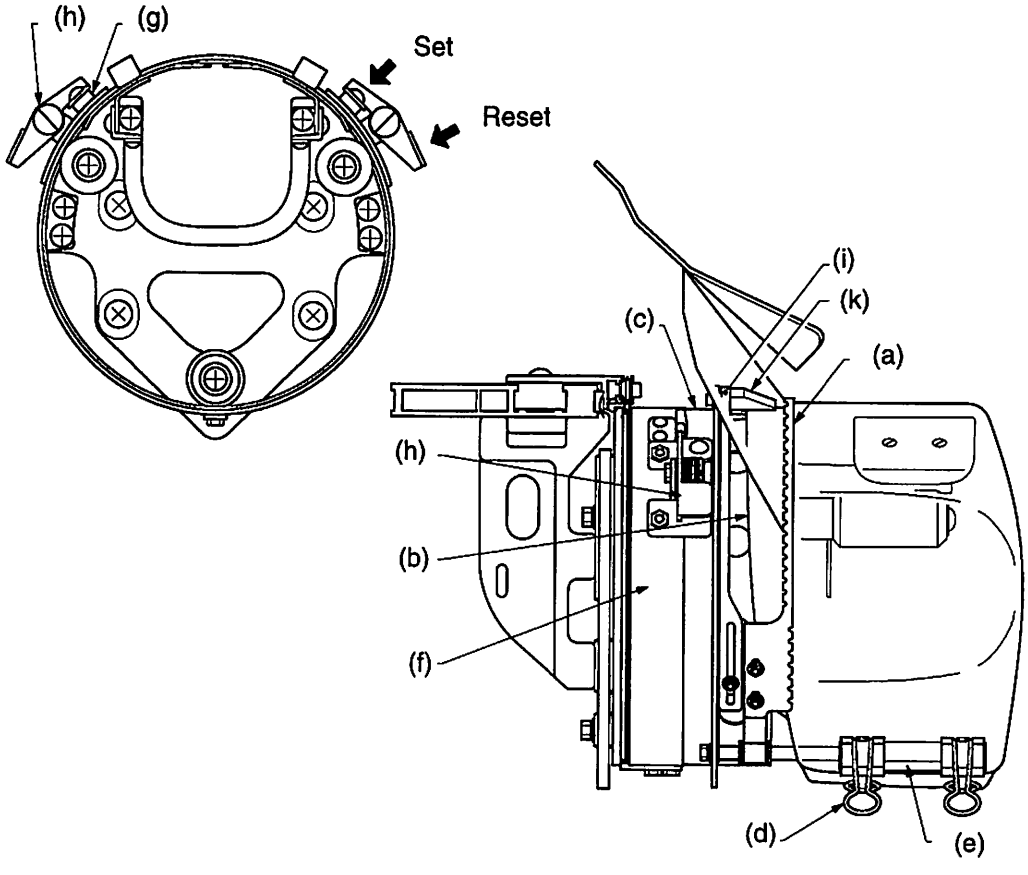

(9504)

[B] Using The Semi-Wide Cap Frame

(1) Open the lid frame (a) and put a cap on the base frame (c) with the sweatband (b) turned inside out.

(2) Adjust the position of the cap where the bottom of the cap's visor touches the lid frame (a) so the cap is correctly balanced and positioned.

(3) When the cap is correctly positioned, close and lock the lid frame (a).

NOTE: When closing the lid frame (a), make sure that side (i) of the lid frame (a) comes above the visor support bracket (k).

NOTE: Procedures in (1), (2), and (3) above are performed on the setting frame.

(4) Install the cap frame, on which the cap is now set, to the drive base (d).

When installing the cap frame to the drive base (d), turn the base frame (c) to the right or left so the visor section does not touch the arm of the embroidery machine until it is locked by the lock pins (e) of the drive base (d).

After securing the cap frame, push lightly on the lock pins (e) of the attaching/detaching lever (f) to make sure it is firmly secured.

NOTE: After finishing the embroidery, push down the attaching/detaching levers (f) to release the lock pins (e), and pull the cap frame out towards you to detach it from the lock pins (e). Remove the cap frame by reversing the procedures in (4).

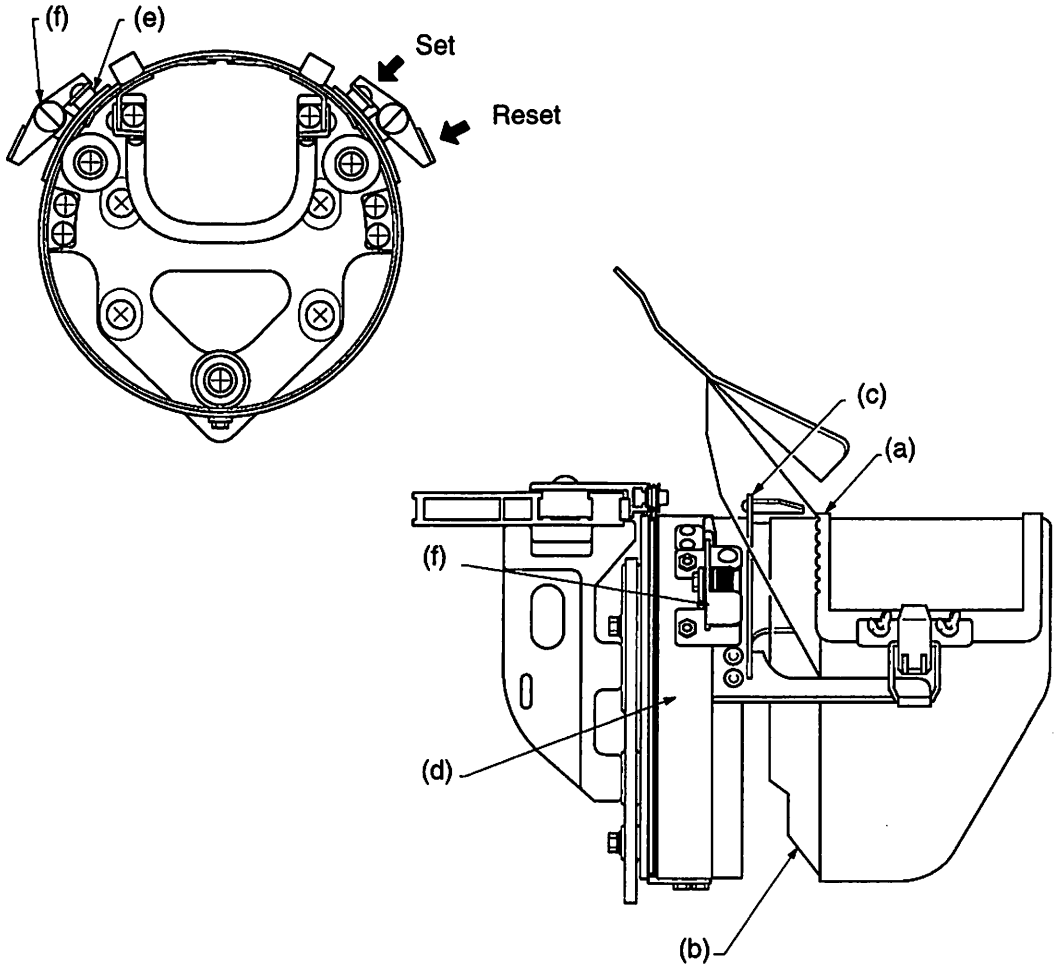

(9504)

PREPARATIONS FOR STARTING EMBROIDERY WITH THE CAP FRAME

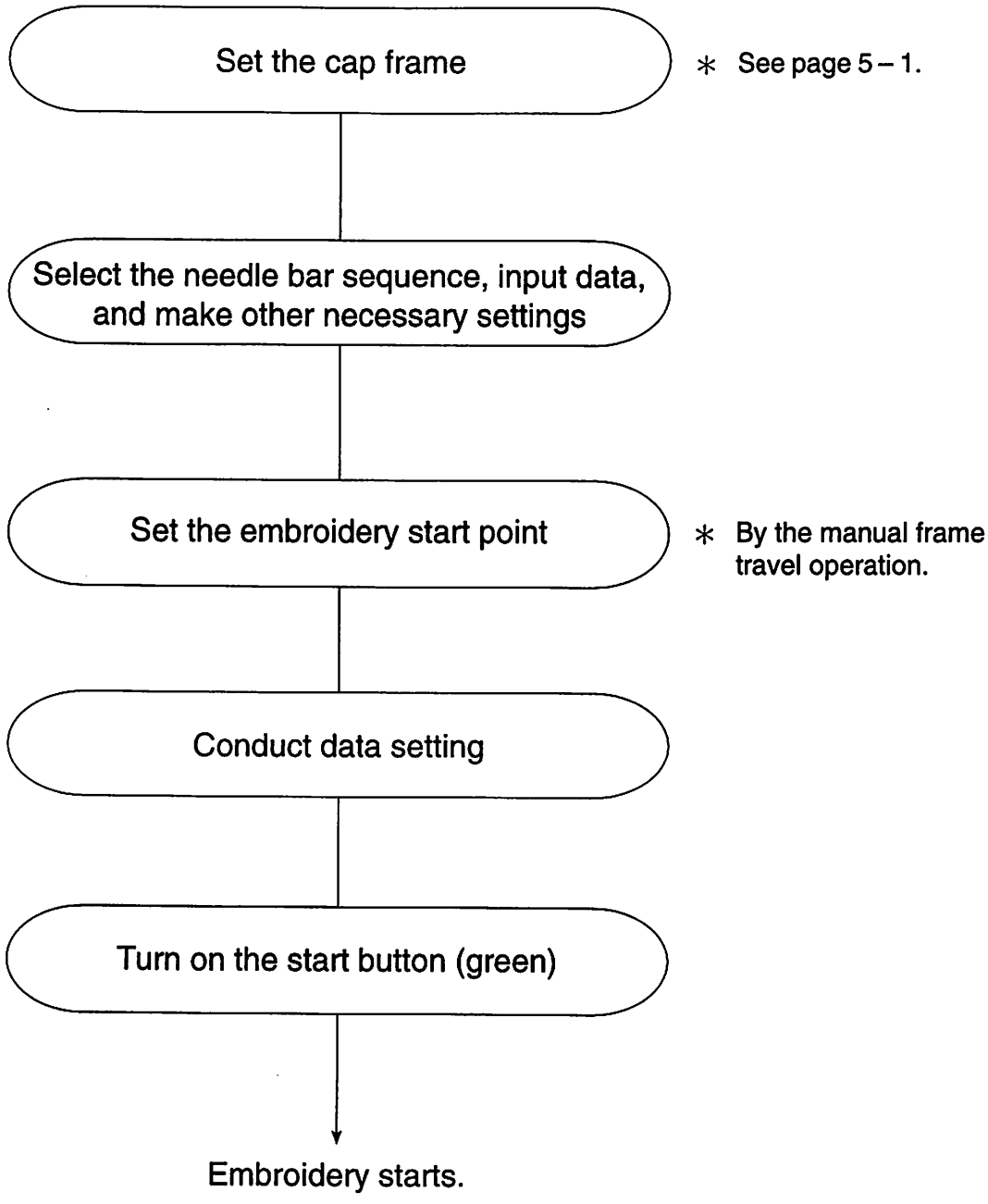

SWITCHING FROM NORMAL EMBROIDERY FRAME TO THE TUBULAR GOODS FRAME SPECIFICATION

[1] Removing the Normal Embroidery Frame

Follow 1. Removing the normal embroidery frame on page 1 – 1.

[2] Checking DIP Switch Settings

Follow 2. Checking DIP switch settings on page 1 – 2.

[3] Setting Parameters (on the Operation Panel)

Procedure

Move the cursor to column [1] (MODE) in the 5th row.

Select parameter setting mode

4 — Select "4: Parameter setting".

SET — Press the SET key.

Select machine setting mode

2 — Select "2: Machine setting".

SET — Press the SET key.

Select a setting item

↑ or ↓ — Press the arrow keys until " n--b " is displayed in the PARAMETER columns on the LED display.

(9611)

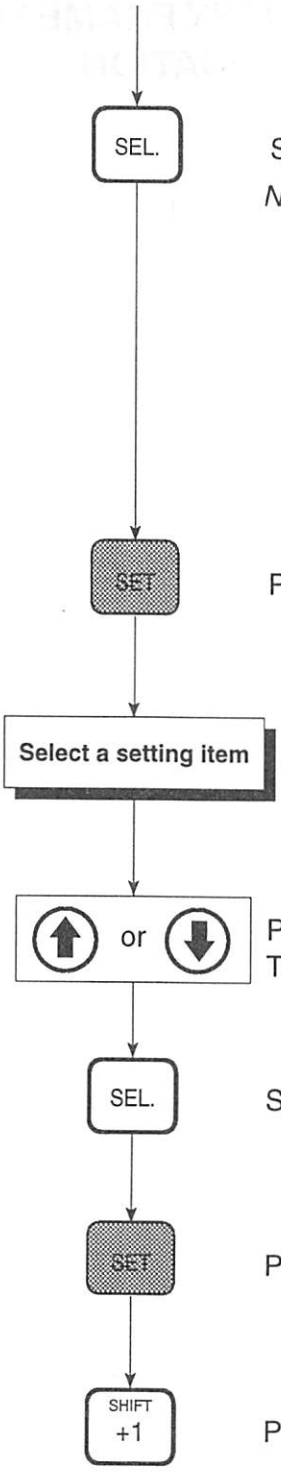

Select "EF: Tubular goods frame".

NOTE 1: When "EF: Tubular goods frame" is selected, the machine speeds are restricted to ranges of 250 to 750 rpm for high-speed operation and 250 to 650 rpm for low-speed operation. Once the selection is made for "EF: Tubular goods frame", the restrictions on machine speeds remain valid even if the frame selection is returned to "SF: Border frame". Accordingly, it is necessary to set the machine speed again as required after returning the frame setting.

Press the SET key.

Press the arrow keys until "n-12" is displayed in the PARAMETER columns on the LED display.

Select "1: Auto sub-table lifter is used".

Press the SET key.

Press the SHIFT key.

The above completes setting.

[4] Switching the Table

Follow 4. Switching the table on page 1 – 4.

[5] Installing the Tubular Goods Frame Base Sash

(1) Attach the spacer pin (a) to the driver connecting plate (b).

(2) Fit the Y-axis base sash (c) to the bearing of the driver connecting plate, and then secure the slide base section (d) lightly *[NOTE 1]* to the Z-spec. frame sash (f) by using attaching screws (e) *[NOTE 2]*.

NOTE 1: Check the direction of the slide base section (d) so that the "BF" attaching position labels on the slide base (d) and the Z-spec. frame sash (f) match before securing them.

NOTE 2: Use the screws (hexagon socket head cap screw M5 × 12) which have been removed in the procedure given in "[1] Removing the Normal Embroidery Frame" on page 1 – 1 or "Removing the Cap Frame Unit" on page 8 – 1.

(3) Fit the bearing of the float-preventive arm (g) to the groove of the Y-axis base sash (c), and then install the float-preventive arm set (h) to the driver connecting plate by using attaching screws (i) and (k).

(4) Push the fixing roller (m) lightly against the edge of the Y-axis base sash (c), and check the parallelism between the holder base (n) and the table surface.

If they are not parallel to each other, adjust parallelism by moving the float-preventive arm (g) back and forth, and then secure them tightly by using attaching screws (o).

(5) Tighten the attaching screws (e) to securely hold the slide base (d) and the Z-spec. frame sash (f) in place.

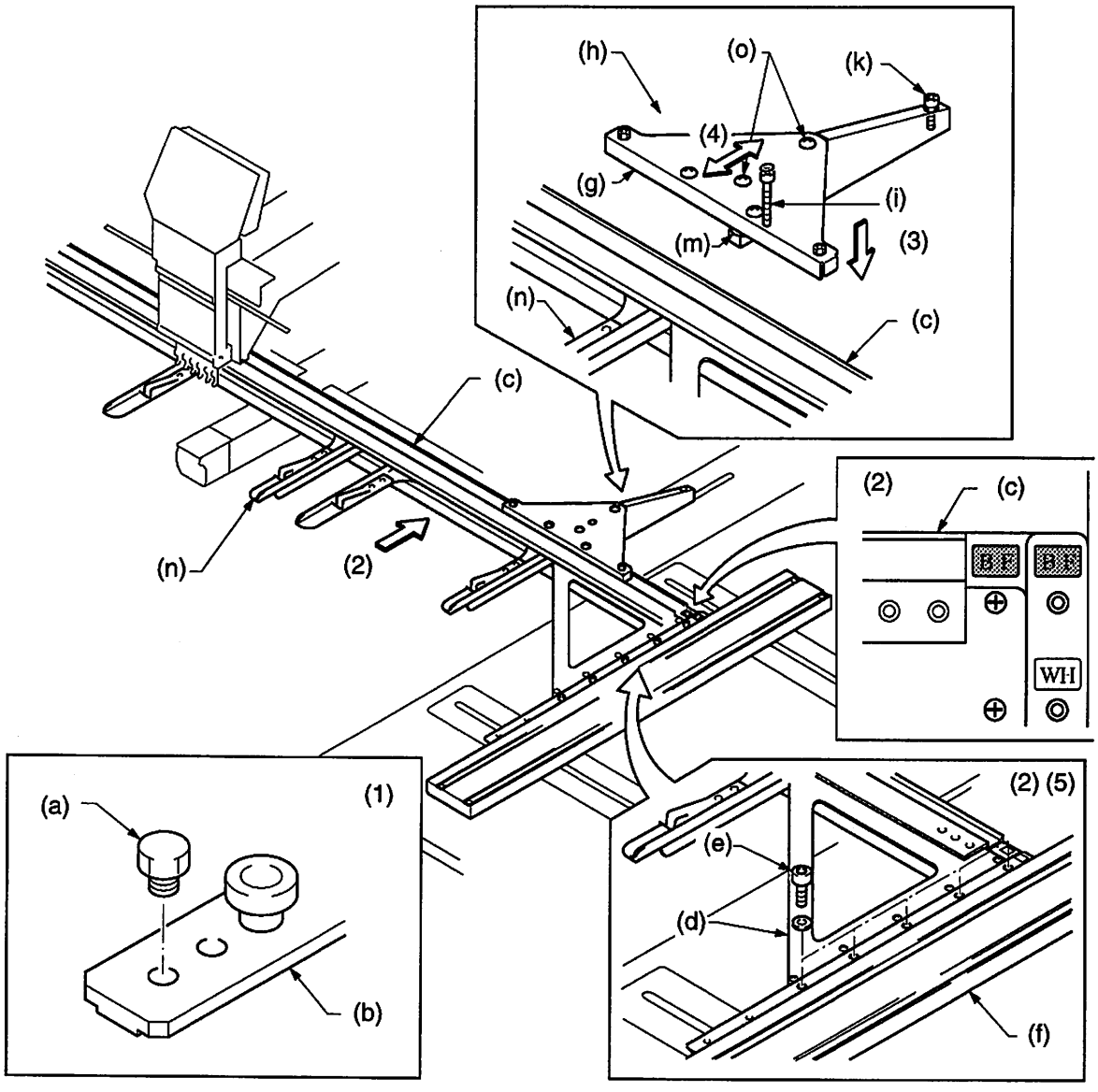

[6] Adjusting the X-/Y-axis Driver Limit Switches and Proximity Switches

Use the Manual Frame Travel keys to move the tubular goods frame (inner frame) back and forth and right and left, and secure the X-/Y-axis driver limit switches (frame safety limit switches) and proximity switches (frame safety limit origin sensors) so that the frame is moved without hitting the needles.

Adjust the frame safety limit switches according to the inner frame size.

REMARK: For the positions of the limit switches and proximity switches, refer to page 1 – 13 "[10] Adjusting the X-/Y-axis Driver Limit Switches and Proximity Switches".

[7] Setting Frame Limit Origin

Follow "[11] Setting the Frame Limit Origin" on page 1 – 14.

SWITCHING FROM A CAP FRAME TO A TUBULAR GOODS FRAME

[1] Removing the Cap Frame Unit

(1) Remove the attaching screws (e) and detach the slide base (a) from the Z-spec. frame sash (b).

(2) Loosen the two attaching screws (c)[NOTE] and detach the Y-axis base sash (d) from the driver connecting plate (f).

NOTE: Loosen the attaching screws (c) until they come out of the Y-axis sash block due to the pushing force generated by springs (g).

(3) Remove cap frame unit (m) in the manner the drive ring (i) is pulled out of the bed (k).

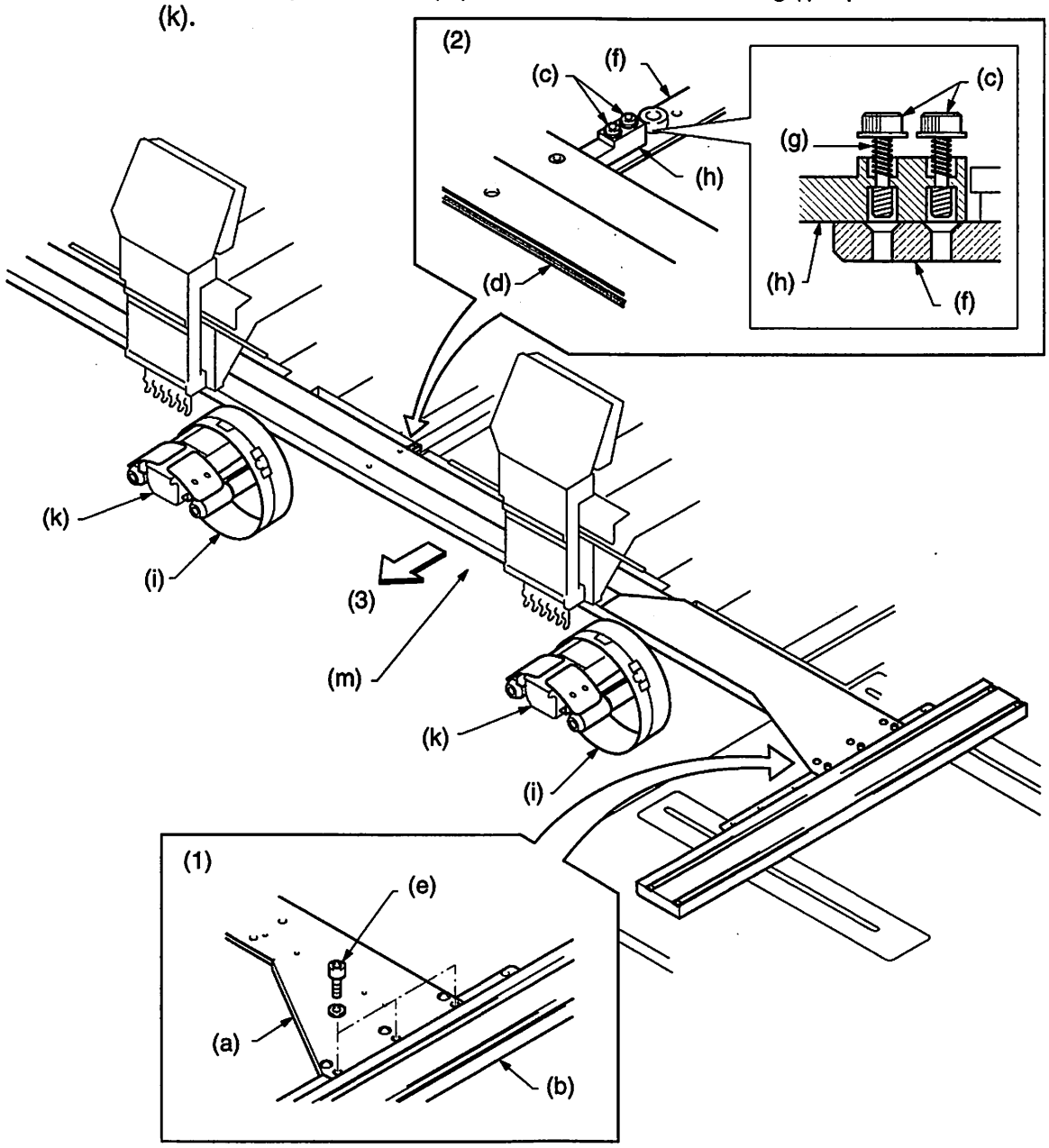

REMARK: After removing the cap frame unit, keep it in storage as it is. It is not necessary to disassemble the cap frame unit.

(9703)

[2] Checking DIP Switch Settings

Follow "[2] Checking DIP Switch Settings" on page 1 – 2.

[3] Setting Parameters (on the Operation Panel)

Follow "[3] Setting Parameters" (on the operational panel) on page 7 – 1.

[4] Installing the Tubular Goods Frame Base Sash

Follow "[5] Installing the Tubular Goods Frame Base Sash" on page 7 – 3.

[5] Replacing the Needle Plate

Remove the wide/semi-wide cap frame needle plate (a), and install a normal/tubular goods frame needle plate (b).

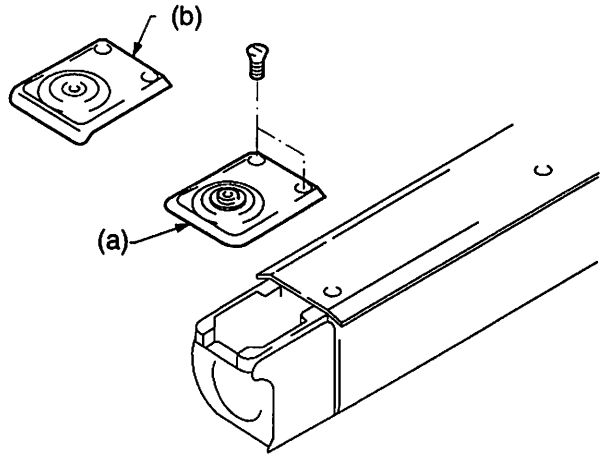

[6] Adjusting the X-/Y-axis Driver Limit Switches and Proximity Switches

Follow "[6] Adjusting the X-/Y-axis Driver Limit Switches and Proximity Switches" on page 7 – 4.

[7] Setting the Frame limit origin

Follow "[11] Setting the Frame Limit Origin" on page 1 – 14.

INSTRUCTIONS FOR INSTALLATION AND ADJUSTMENT OF THE CAP FRAME

When installing and adjusting the cap frame, please follow the instructions and explanations given below.

1) The center mark in the illustration is used for centering the cap frame when reinstalling the sash on the machine (A). The lower of part of the center mark is used to align the cap frame drive rings when putting together the sash for the first time or when replacing a drive ring.

2) This can be accomplished by turning off the power of the machine and manually moving the sash forward so that the center mark is over the needle hole in the needle plate.

3) Rotate the main shaft to the lower dead point so that the needle can be lowered into the center mark for positioning.

4) When adjusting the center, make sure that the frame is at the center point marked on the table or table cover. Also make sure there is a gap in the drive lever after tightening the screw.

5) When putting the sash together for the first time it will be necessary to align all of the drive rings, finger tighten the four screws used to secure the drive ring to the sash, then manually move the sash so that the center mark has the same amount of movement to the front and back of the needle hole.

6) Turn on the power of the machine to keep the sash from moving while making the adjustment.

7) Lower the needle on one side of (B), slightly tighten the screws, then slide the drive ring to the other side and lower the needle again.

8) If the position is correct, tighten the screws and adjust the center.

9) If not, continue sliding the ring back and forth until the position is correct and then tighten the screws.

10) After installing the sash on the machine, it will be necessary to adjust the frame limit switches.

11) On older machines the switches on the Y frame driver must first be raised to the proper position and then adjusted.

12) On newer machines the switch box under the table must be changed to "HF".

13) The switches should be adjusted according to the illustration on the following page.

14) Please keep in mind that the switches must be adjusted according to the frame size as the frame can be adjusted to three different positions.

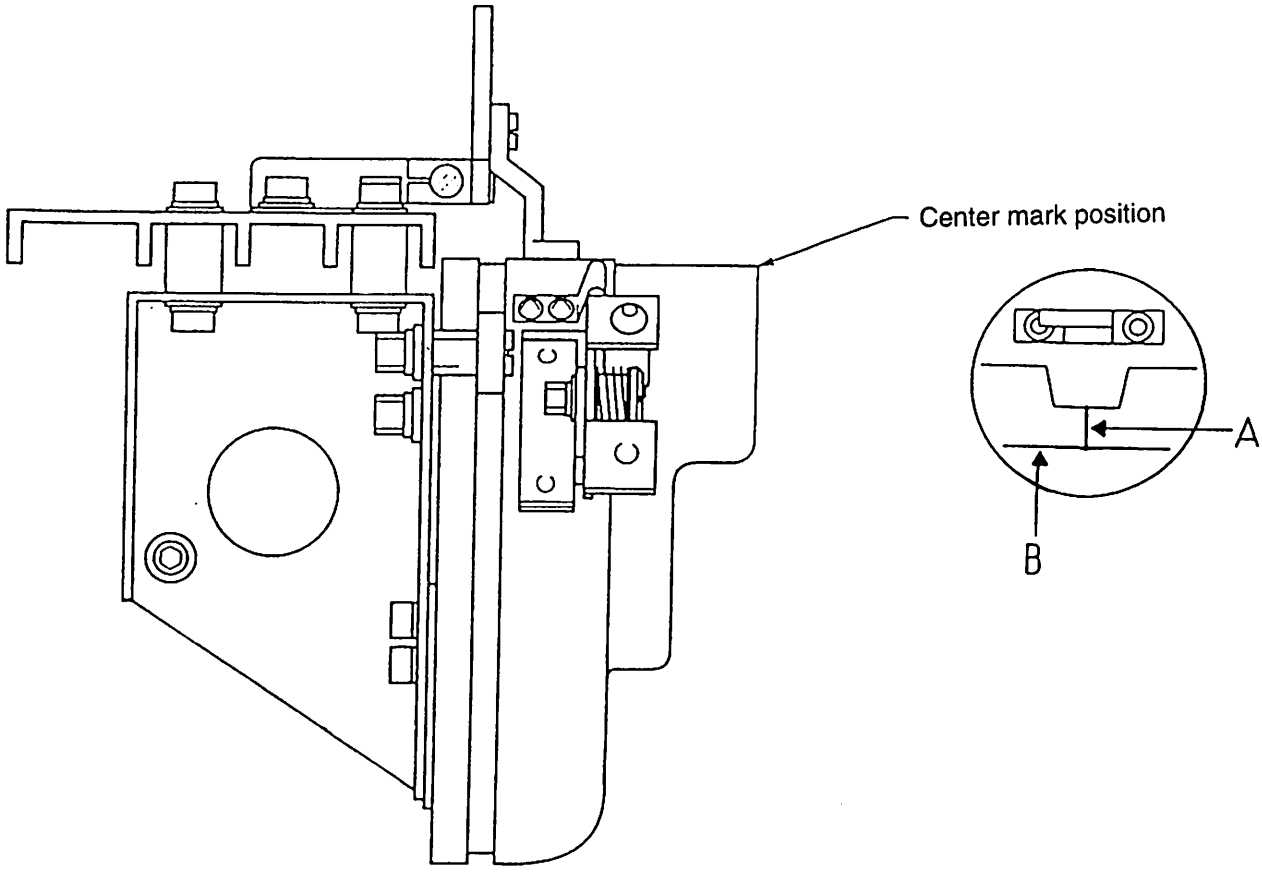

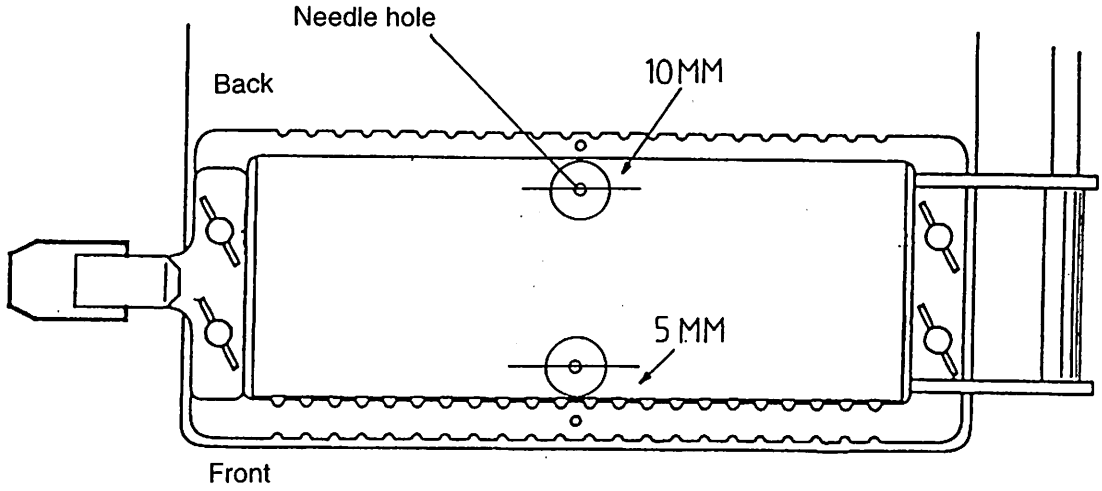

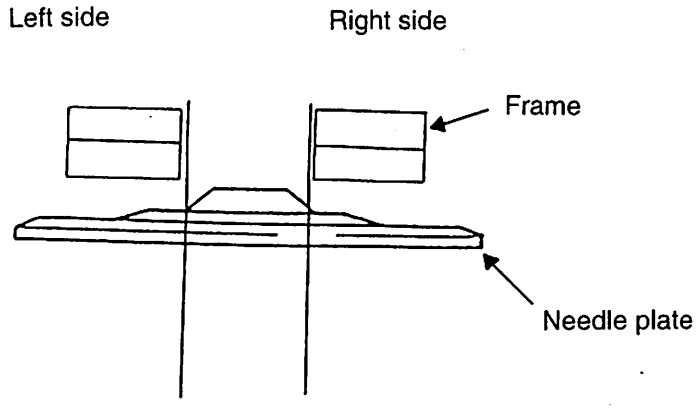

15) The holder base assembly will also need to be adjusted when installing the cap frame for the first time.

16) The roller should be adjusted so that it is in light contact with the bed rail. It must also be level.

17) When removing and installing the cap frame, the holder base assembly should be checked to ensure that it is correct.

18) If it is not, it should be corrected.

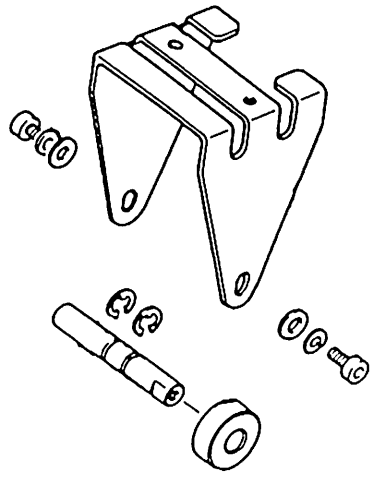

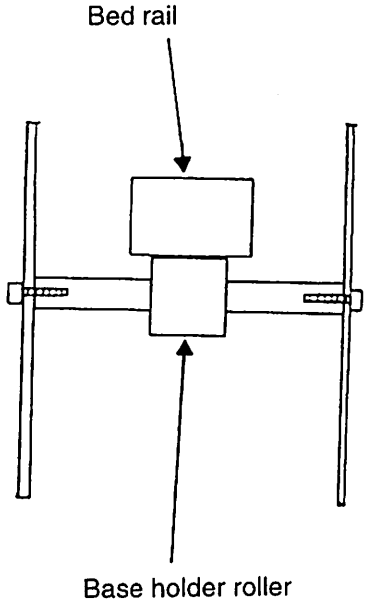

■ Manufactured by:
Tokai Industrial Sewing Machine Co., Ltd.

1800 Ushiyama-cho, Kasugai City, Aichi Prefecture, 486 Japan

Telephone: 568-33-1161 Fax: 568-33-1191

■ Distributed by:
Tajima Industries Ltd.

3-19-22 Shirakabe, Higashi-ku, Nagoya, 461 Japan

Telephone: 52-932-3444 Fax: 52-932-2457

■ Authorized Distributor:

(9703)

THE TAJIMA GROUP

Tajima Industries Ltd.
19-22, Shirakabe, 3-chome, Higashi-ku, Nagoya, 461, JAPAN
TEL.(052)932-3811 FAX.(052)932-2457

Tokai Industrial Sewing Machine Co.,Ltd.
NO. 1800, Ushiyama-cho, Kasugai, Aichi-pre., 486, JAPAN
TEL.(0568)33-1161 FAX.(0568)33-1191